Drying Tumblers

250 Pound Capacity

Refer to Page 3 for Model Numbers

Parts

Alliance Laundry Systems

www.comlaundry.com

Part No. D1030R1
December 2008

Table of Contents

Title	Page
Parts Ordering Information	3
Serial Plate Location	3
Model Identification	5
DMP Control Panel Assembly - Non-Tilting	6
DMP Control Panel Assembly - 1-Way Tilting	8
Pro and ProHC Control Panel Assembly - 1-Way Tilting	10
FDS Control Box Assembly	12
Top Section - Non-Tilting, 1-Way Tilting and 2-Way Tilting (Front View)	14
Top Section - Non-Tilting, 1-Way Tilting and 2-Way Tilting (Rear View)	16
Bottom Section - Non-Tilting	18
Bottom Section - 1-Way and 2-Way Tilting	20
Bottom Section	22
Center Section - 2-Way Tilting	24
Guards - 1-Way Tilting	26
Guards - 2-Way Tilting	28
Manual Loading Door - Left	30
Manual Loading Door - Right	32
Automatic Loading Door - Left	34
Automatic Loading Door - Right	36
Loading Door Switches - Manual and Automatic	38
Loading Door Switches - Manual Non-Tilting	40
Guide Wheel Assembly - Front	42
Guide Wheel Assembly - Rear	44
Guide Wheel	46
Inverter	48
Air Switch Assembly	50
Motor Control Assembly	52
Basket Drive	54
Fan Assembly - Gas and Steam	56
DMP Thermostat Assembly	58
FDS Thermostat	60
Pro Sensor Assembly	62
ProHC Sensor Assembly - Upper Assembly	64
ProHC Sensor Assembly - Lower Assembly	66
Ram Ignition Assembly	68
Electrical Connection Box	70
Pneumatic Box - Non-Tilting with Automatic Doors	72
Pneumatic Box - 1-Way Tilting with Manual and Automatic Doors	74
Pneumatic Box - 2-Way Tilting with Automatic Doors	76
Automatic Door Cylinders/Fittings	78
Automatic Door Pneumatic Valves/Fittings	80

© Copyright 2008, Alliance Laundry Systems LLC

All rights reserved. No part of the contents of this book may be reproduced or transmitted in any form or by any means without the expressed written consent of the publisher.

Cylinder, Fittings and Hardware 82
FDS Sensor Assembly 84
FDS Water Manifold Assembly 86
Steam Bonnet 88
Gas Bonnet Assembly 90
Bonnet Support Brackets 92
Additional Parts 94
Parts Index 95

© Copyright, Alliance Laundry Systems LLC – DO NOT COPY or TRANSMIT

Parts Ordering Information

If literature or replacement parts are required, contact the source from whom the machine was purchased or contact Alliance Laundry Systems at (920) 748-3950 for the name and address of the nearest authorized parts distributor.

For technical assistance, call (920) 748-3121.

Serial Plate Location

When calling or writing about your product, be sure to mention model and serial numbers. Model and serial numbers are located on serial plates.

© Copyright, Alliance Laundry Systems LLC – DO NOT COPY or TRANSMIT

Notes

© Copyright, Alliance Laundry Systems LLC – DO NOT COPY or TRANSMIT

Model Identification

Information in this manual is applicable to these tumbler models:

HD250

© Copyright, Alliance Laundry Systems LLC – DO NOT COPY or TRANSMIT

DMP Control Panel Assembly - Non-Tilting

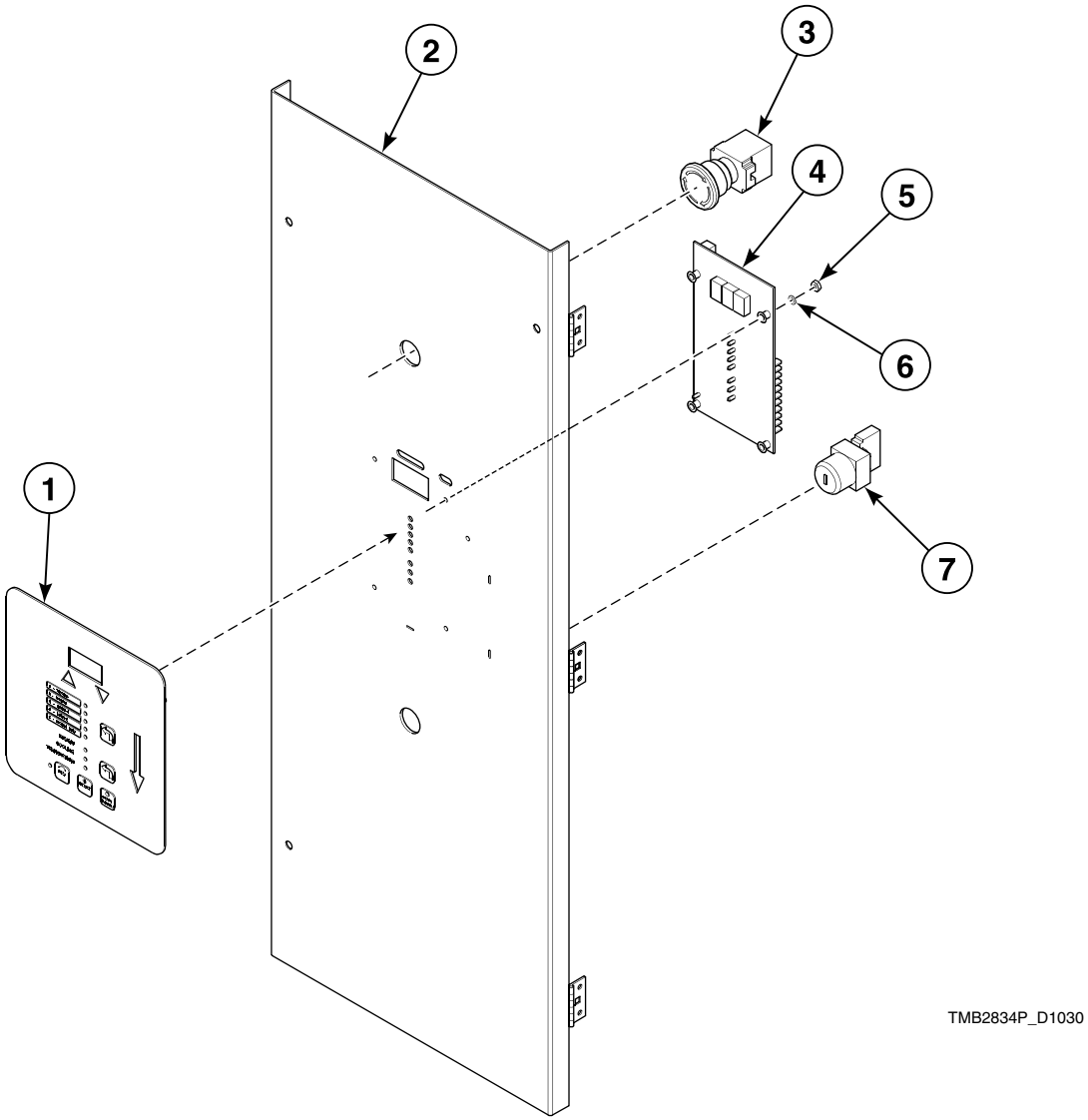

© Copyright, Alliance Laundry Systems LLC – DO NOT COPY or TRANSMIT

DMP Control Panel Assembly - Non-Tilting

REF	PART NO.	DESCRIPTION	COMMENTS
1	N/A	DMP OPL Overlay	
2	N/A	Door	
3	TU14435	Emergency Stop Button Kit	
4	TU14404P	Controller	OPL/Coin
5	TU3400	Nut	No. 6-32
6	M270	Washer	No. 6; Lock
7	TUL272	Contact Switch	Includes key

N/A = Part no longer available

© Copyright, Alliance Laundry Systems LLC – DO NOT COPY or TRANSMIT

DMP Control Panel Assembly - 1-Way Tilting

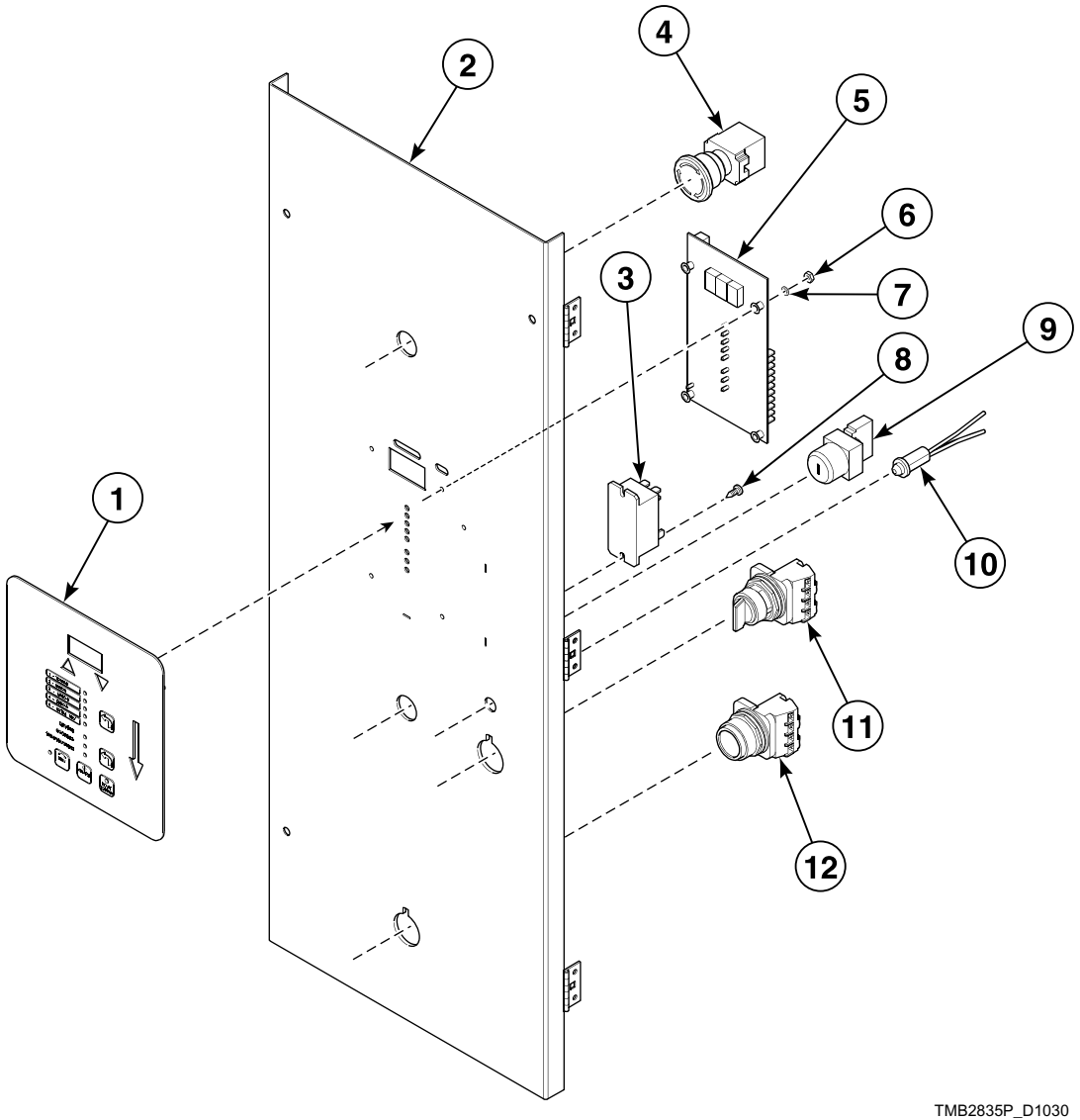

TMB2835P_D1030

© Copyright, Alliance Laundry Systems LLC – DO NOT COPY or TRANSMIT

DMP Control Panel Assembly - 1-Way Tilting

REF	PART NO.	DESCRIPTION	COMMENTS
	TU12253	Stud	Self clinch
1	44037901P	Membrane Switch	DMP OPL
2	N/A	Door	
3	F1300P	Relay	
4	TU14435	Emergency Stop Button Kit	
5	TU14404P	Controller	OPL/Coin
6	TU3400	Nut	No. 6-32
7	M270	Washer	No. 6; Lock
8	TU7733	Screw	No. 8
9	TUL272	Contact Switch	Includes key
10	TUT316	LED Light Assembly	
11	TUL273	3-Position Lever Switch	
12	TUL274P	Pushbutton Switch	

N/A = Part no longer available

© Copyright, Alliance Laundry Systems LLC – DO NOT COPY or TRANSMIT

Pro and ProHC Control Panel Assembly - 1-Way Tilting

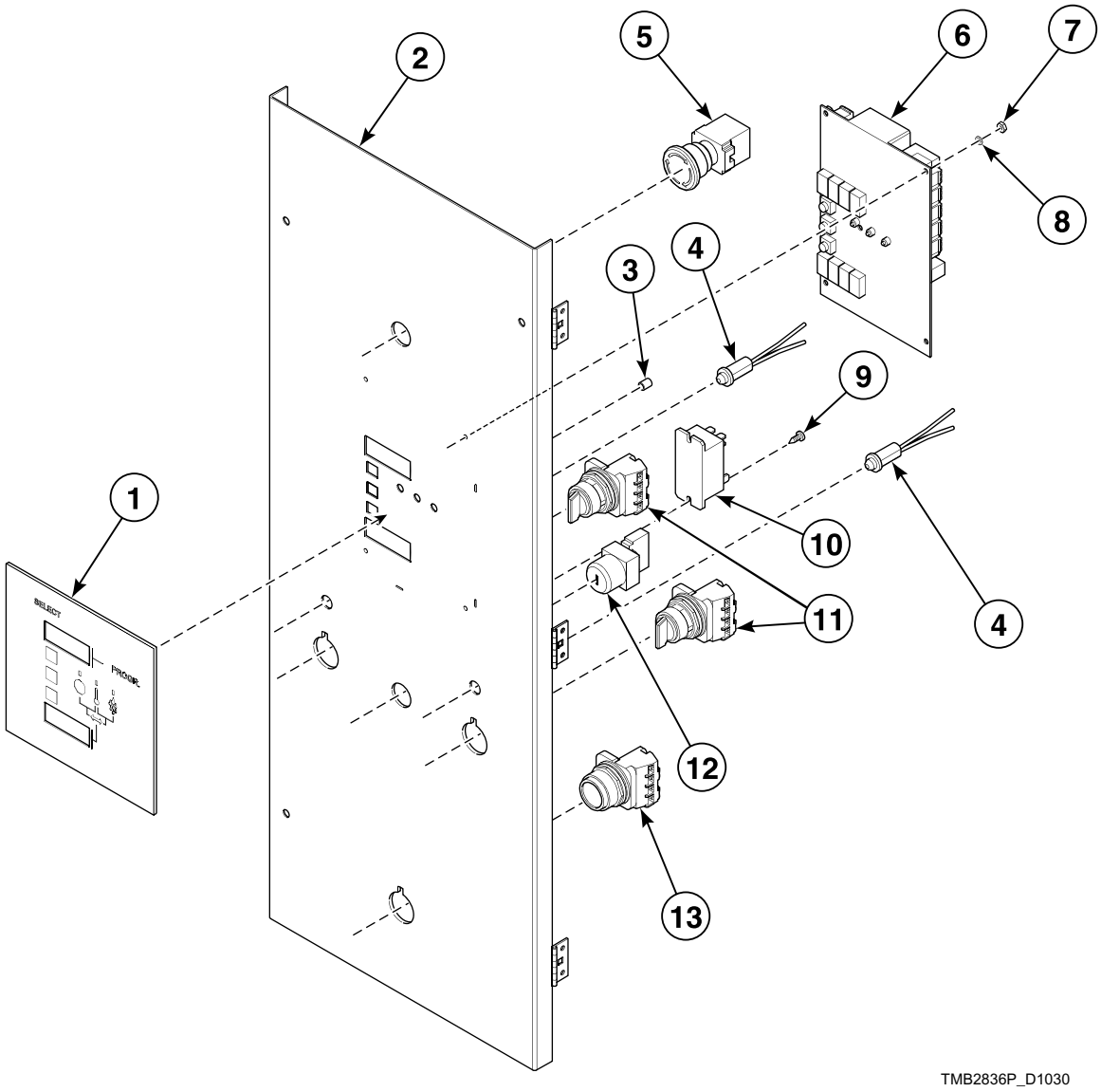

TMB2836P_D1030

© Copyright, Alliance Laundry Systems LLC – DO NOT COPY or TRANSMIT

Pro and ProHC Control Panel Assembly - 1-Way Tilting

REF	PART NO.	DESCRIPTION	COMMENTS
1	254/00039/00	Operating Touchpad	Pro
	254/00018/00	Control Label	ProHC
2	N/A	Door	
3	N/A	Spacer	Nylon
4	TUT316	LED Light Assembly	
5	TU14435	Emergency Stop Button Kit	
6	254/00070/00P	Control Board	
7	TU3400	Nut	No. 6-32
8	M270	Washer	No. 6; Lock
9	TU7733	Screw	No. 8
10	F1300P	Relay	
11	TUL273	3-Position Lever Switch	
12	TUL272	Contact Switch	Includes key
13	TUL274P	Pushbutton Switch	

N/A = Part no longer available

© Copyright, Alliance Laundry Systems LLC – DO NOT COPY or TRANSMIT

FDS Control Box Assembly

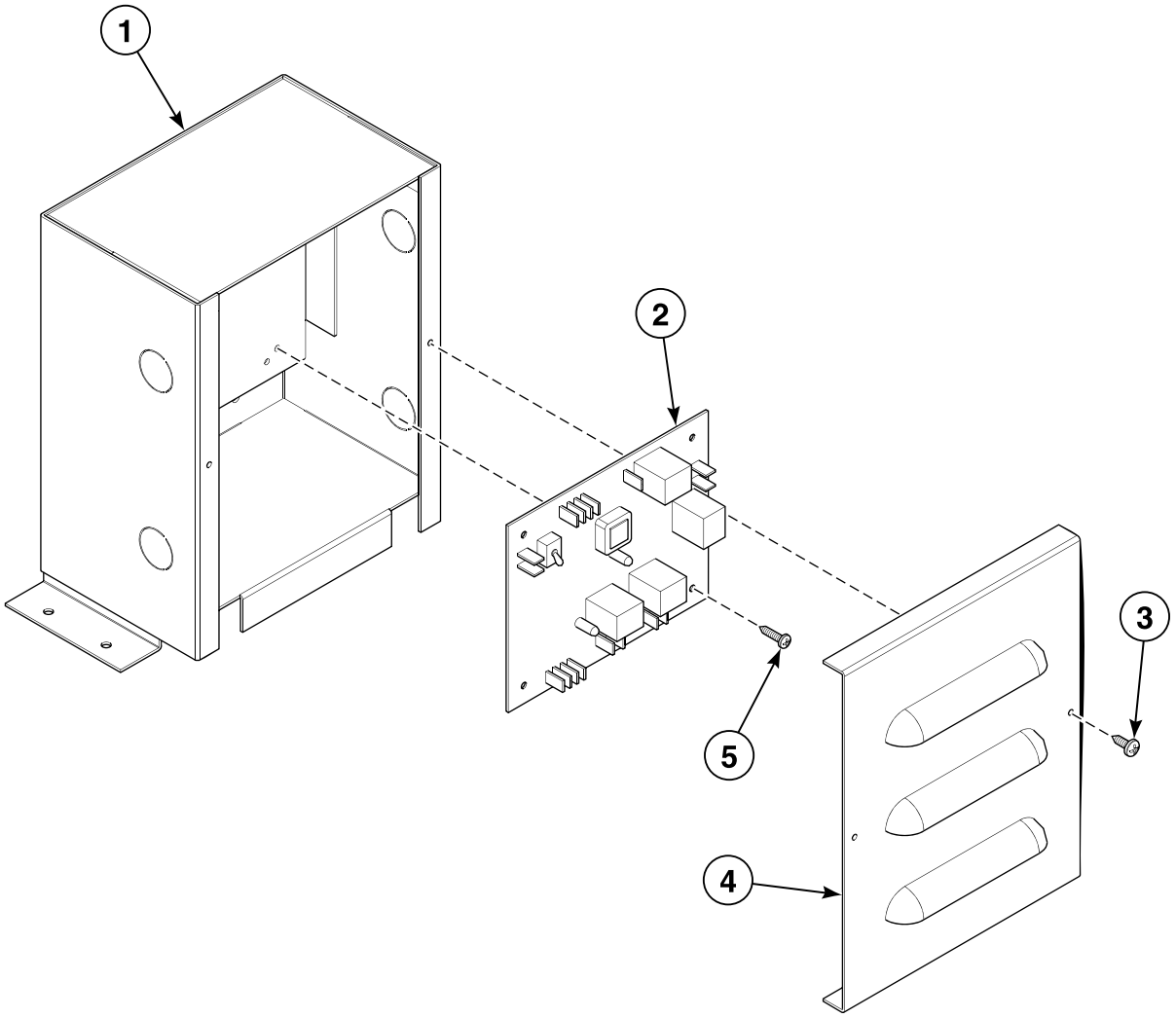

TMB2837P_D1030

© Copyright, Alliance Laundry Systems LLC – DO NOT COPY or TRANSMIT

FDS Control Box Assembly

REF	PART NO.	DESCRIPTION	COMMENTS
1	TUL373	Box	
2	TU15814A	Board	
3	TU7733	Screw	No. 8
4	TUL222	Box Cover	
5	F540	Screw	No. 6

© Copyright, Alliance Laundry Systems LLC – DO NOT COPY or TRANSMIT

Top Section - Non-Tilting, 1-Way Tilting and 2-Way Tilting (Front View)

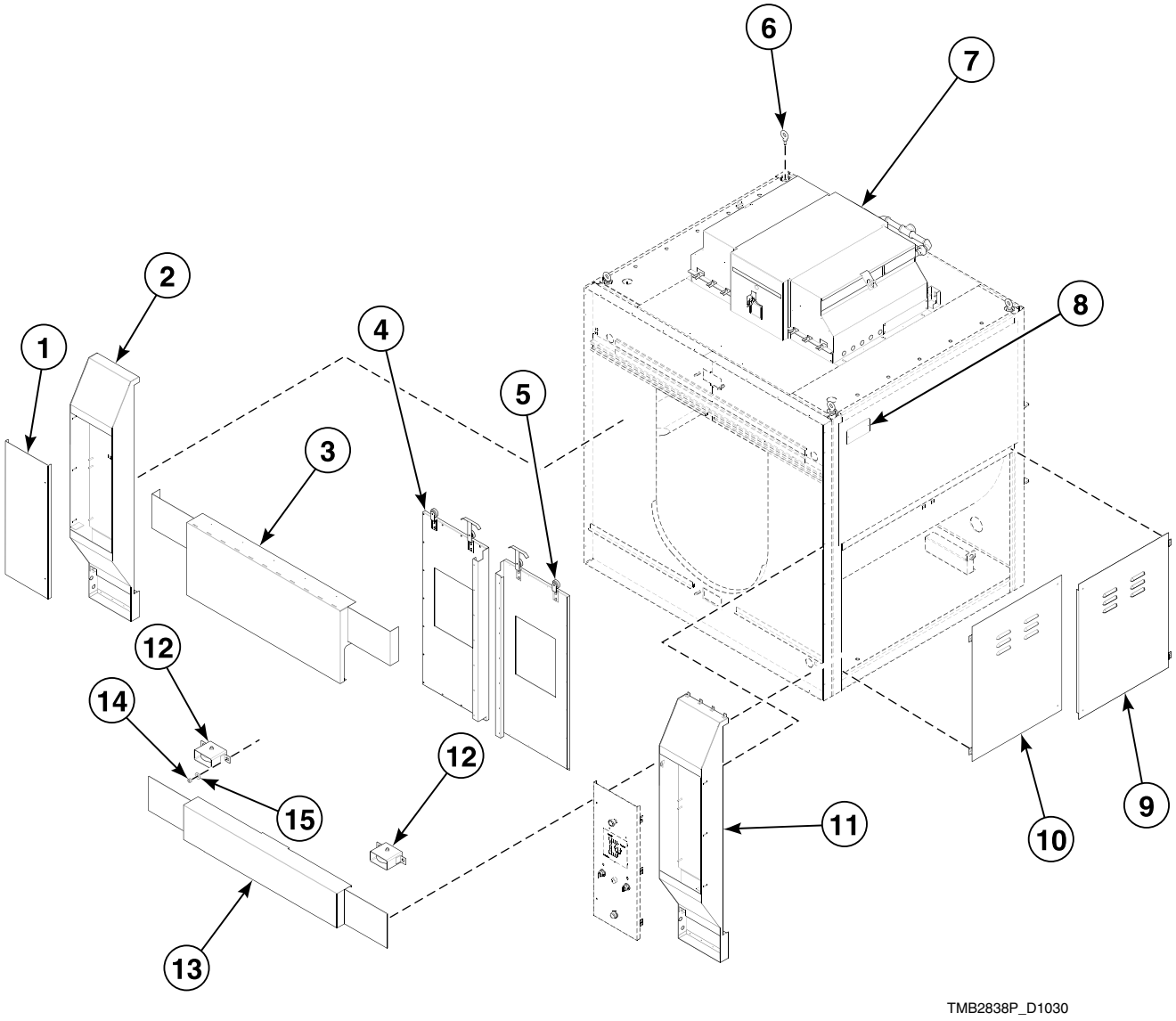

© Copyright, Alliance Laundry Systems LLC – DO NOT COPY or TRANSMIT

Top Section - Non-Tilting, 1-Way Tilting and 2-Way Tilting (Front View)

REF	PART NO.	DESCRIPTION	COMMENTS
	C5531	Roller	
1	N/A	Control Box Lid	Left
2	N/A	Control Box	Left
3	N/A	Upper Front Panel Cover	
4	TUL176	Loading Door Assembly	Left; Manual
	N/A	Loading Door	Left; Auto doors
5	TUL177	Loading Door Assembly	Right; Manual
	TUL449	Loading Door Assembly	Right; Auto doors
6	N/A	Eye Bolt	
7	N/A	Gas Bonnet Assembly	
8	N/A	Cover Plate	
9	N/A	Access Door	Right
10	N/A	Access Door	Left
11	N/A	Control Box	Right
12	N/A	Basket Guide Wheel	Front
13	TUL214	Bottom Cover Plate	Front panel
14	N/A	Nut	1/2-13
15	TU2883	Washer	Flat; 1/2 inch

N/A = Part no longer available

© Copyright, Alliance Laundry Systems LLC – DO NOT COPY or TRANSMIT

Top Section - Non-Tilting, 1-Way Tilting and 2-Way Tilting (Rear View)

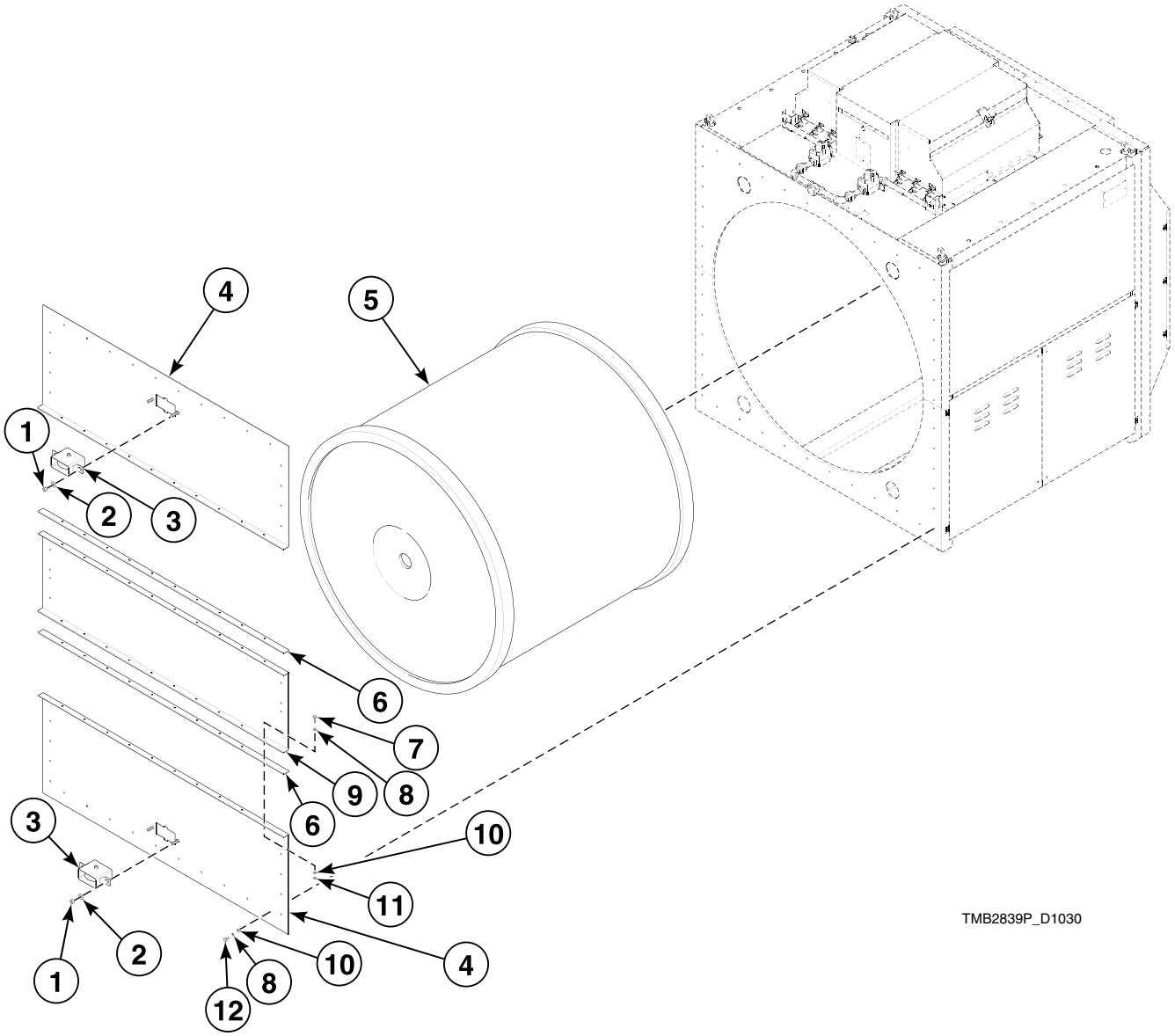

© Copyright, Alliance Laundry Systems LLC – DO NOT COPY or TRANSMIT

Top Section - Non-Tilting, 1-Way Tilting and 2-Way Tilting (Rear View)

REF	PART NO.	DESCRIPTION	COMMENTS
	TU14684	Contactor	Older models only
1	N/A	Nut	1/2-13
2	TU2883	Washer	Flat; 1/2 inch
3	TUL317	Basket Guide Wheel Assembly	Rear
4	N/A	Rear Cover	Upper/bottom
5	TUL120	Basket Assembly	
6	N/A	Rear Cover Spacer	
7	FB189	Screw	1/4-20 x 1 inch long; Hex head bolt
8	TU2847	Washer	Flat; 1/4 inch
9	N/A	Middle Rear Cover	
10	03189	Washer	Lock; 1/4 inch
11	20275	Nut	1/4-20
12	02422	Screw	1/4-20 x 1/2 inch long; Hex head bolt

N/A = Part no longer available

© Copyright, Alliance Laundry Systems LLC – DO NOT COPY or TRANSMIT

Bottom Section - Non-Tilting

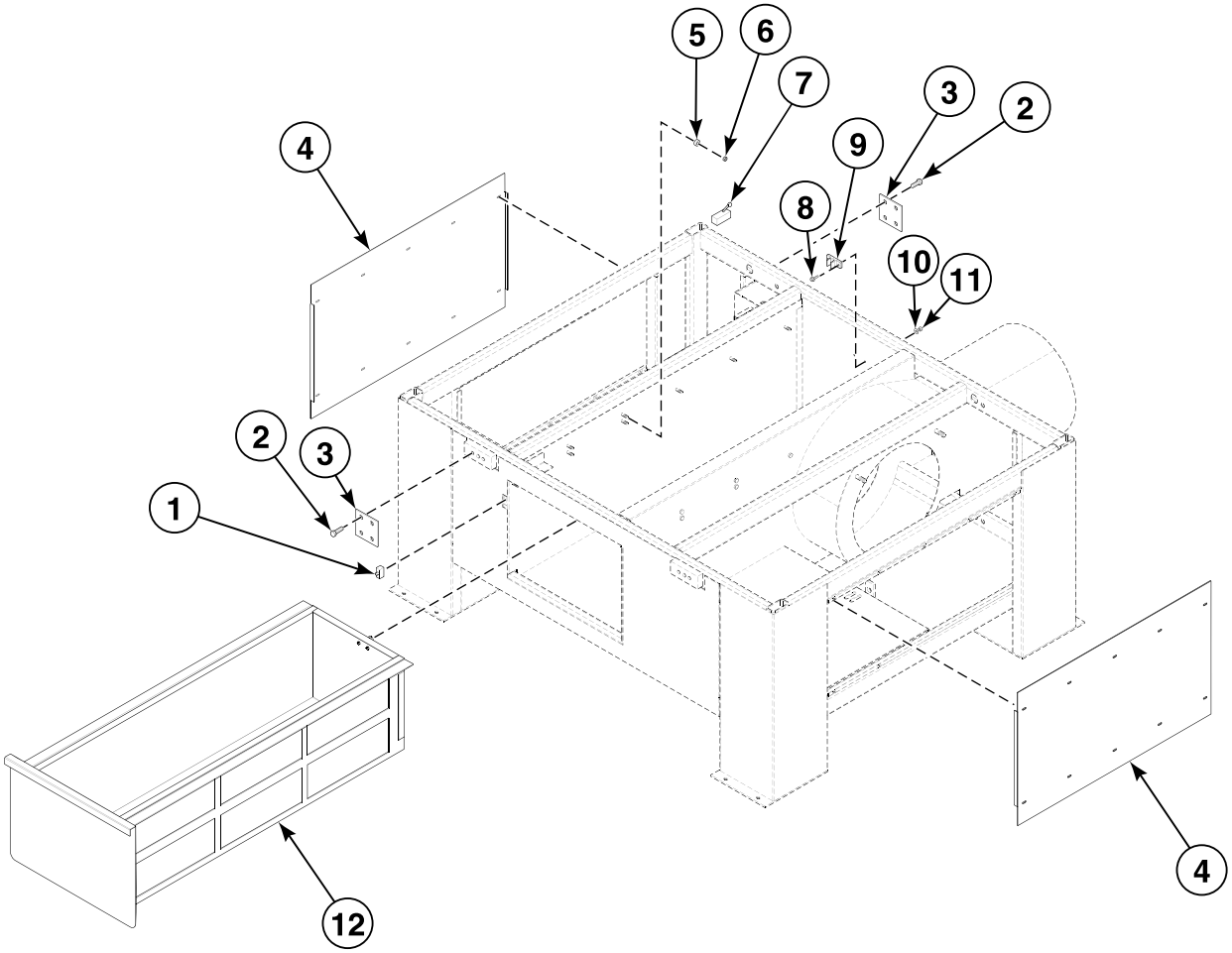

TMB2840P_D1030

© Copyright, Alliance Laundry Systems LLC – DO NOT COPY or TRANSMIT

Bottom Section - Non-Tilting

REF	PART NO.	DESCRIPTION	COMMENTS
1	EA-11621-0	Lint Door Switch	
2	TUX503	Screw	1/2-13 x 2 1/2 inch long; Hex head bolt
3	N/A	Non-Tilting Plate	
4	N/A	Side Cover	
5	SFD119	Main Bearing	7/8 inch OD
6	N/A	Nut	1/2-13
7	N/A	Level Switch	
8	F725	Screw	No. 10-24; Machine
9	TU15744H	Door Holder	Nylon; Set
10	TU4820	Washer	Flat; 3/16 inch
11	03673	Nut	No. 10-24
12	N/A	Lint Drawer	

N/A = Part no longer available

© Copyright, Alliance Laundry Systems LLC – DO NOT COPY or TRANSMIT

Bottom Section - 1-Way and 2-Way Tilting

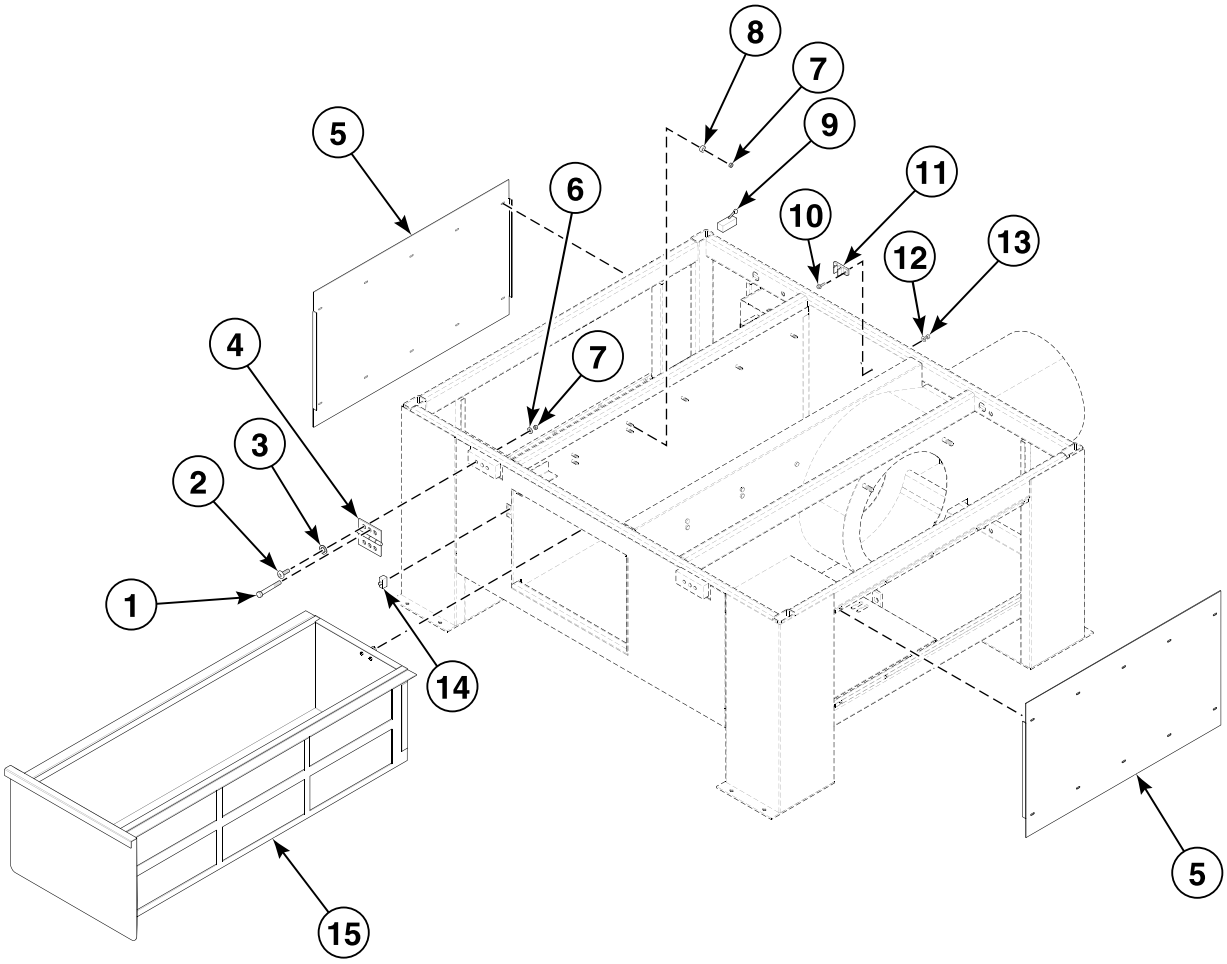

TMB2841P_D1030

© Copyright, Alliance Laundry Systems LLC – DO NOT COPY or TRANSMIT

Bottom Section - 1-Way and 2-Way Tilting

REF	PART NO.	DESCRIPTION	COMMENTS
1	TUL458	Bolt	1/2-13 x 4 inch long; Socket head
2	TUL459	Bolt	1/2-13 x 1 5/8 inch long; Socket head
3	N/A	Washer	Lock; 1/2 inch
4	TUL454	Hinge Assembly	
5	N/A	Side Cover	
6	TU2883	Washer	Flat; 1/2-13
7	N/A	Nut	1/2-13
8	SFD119	Main Bearing	7/8 inch OD
9	N/A	3-Position Switch	
10	F725	Screw	No. 10-24; Machine
11	TU15744H	Door Holder	Nylon; Set
12	TU4820	Washer	Flat; 3/16 inch
13	03673	Nut	No. 10-24
14	EA-11621-0	Lint Door Switch	
15	N/A	Lint Door	

N/A = Part no longer available

© Copyright, Alliance Laundry Systems LLC – DO NOT COPY or TRANSMIT

Bottom Section

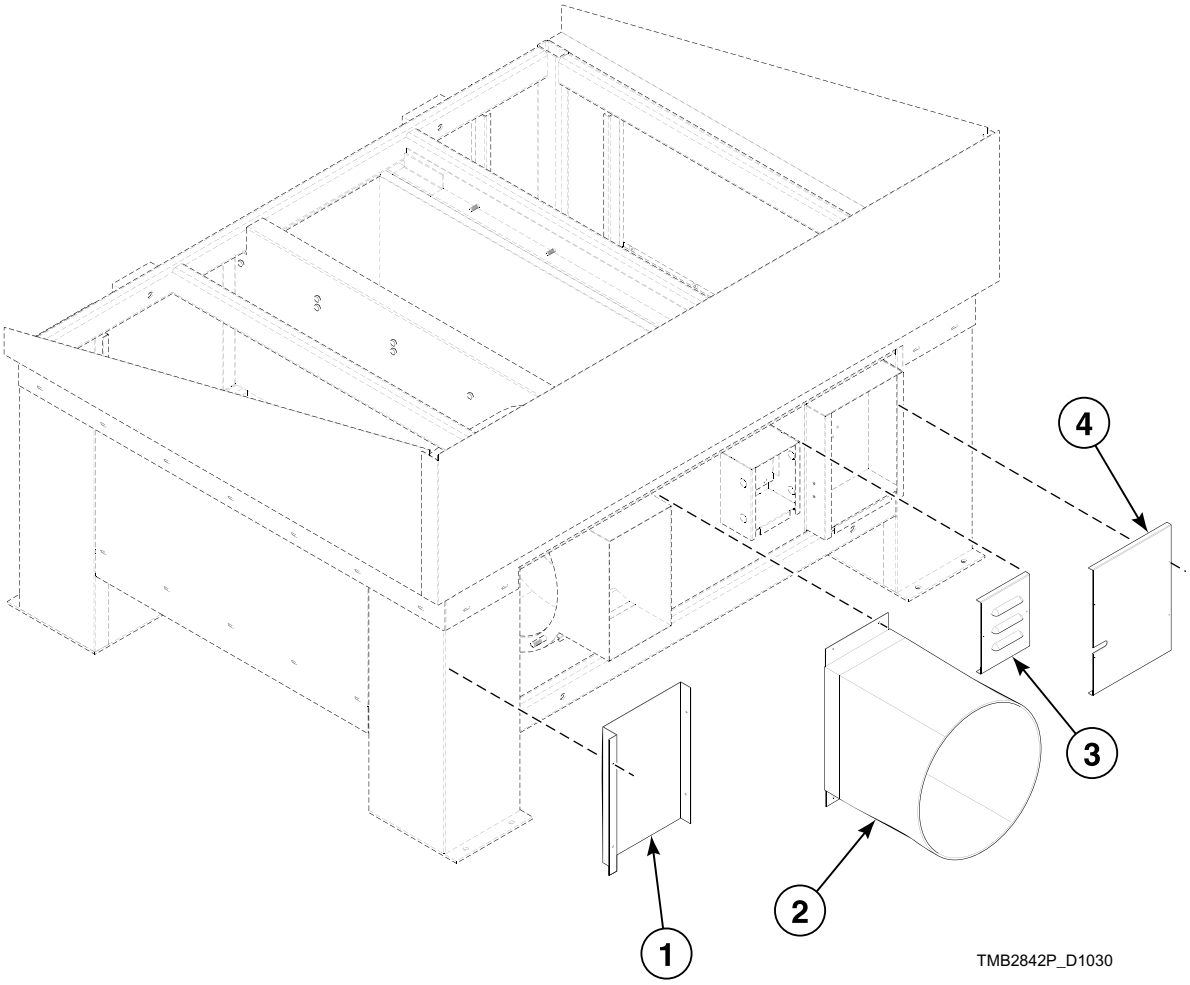

© Copyright, Alliance Laundry Systems LLC – DO NOT COPY or TRANSMIT

Bottom Section

REF	PART NO.	DESCRIPTION	COMMENTS
1	N/A	Rear Cover	
2	N/A	Duct Exhaust	
3	TUL222	Box Cover	
4	TUL228	Pneumatic Box Cover Plate	

N/A = Part no longer available

© Copyright, Alliance Laundry Systems LLC – DO NOT COPY or TRANSMIT

Center Section - 2-Way Tilting

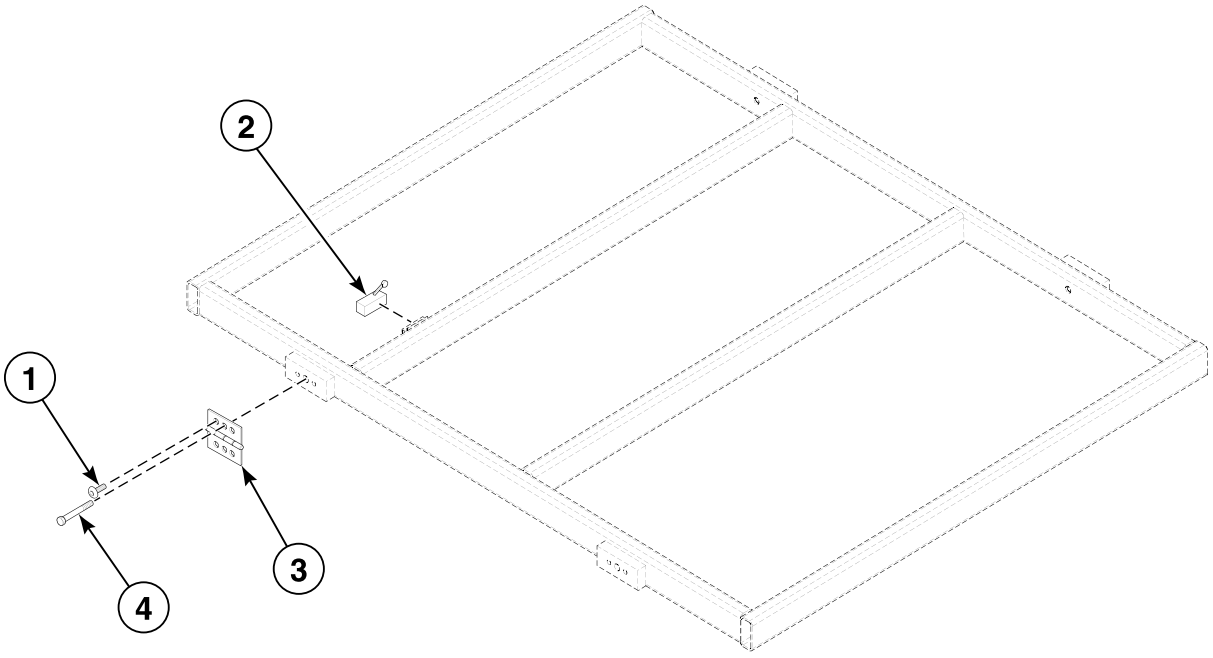

TMB2843P_D1030

© Copyright, Alliance Laundry Systems LLC – DO NOT COPY or TRANSMIT

Center Section - 2-Way Tilting

REF	PART NO.	DESCRIPTION	COMMENTS
1	TUL459	Bolt	1/2-13 x 5/8 inch long; Socket head
2	N/A	3-Position Switch	
3	TUL454	Hinge Assembly	
4	TUL458	Bolt	1/2-13 x 4 inch long; Socket head

N/A = Part no longer available

© Copyright, Alliance Laundry Systems LLC – DO NOT COPY or TRANSMIT

Guards - 1-Way Tilting

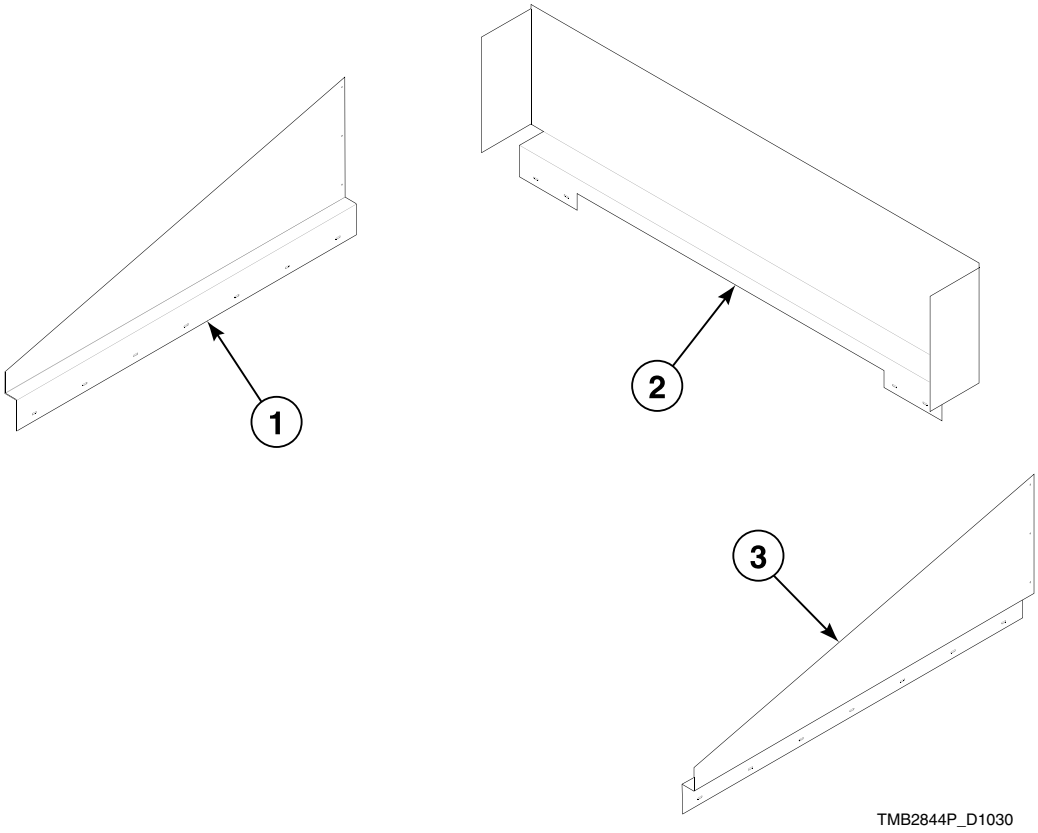

© Copyright, Alliance Laundry Systems LLC – DO NOT COPY or TRANSMIT

Guards - 1-Way Tilting

REF	PART NO.	DESCRIPTION	COMMENTS
1	N/A	Tilting Guard	Left
2	N/A	Tilting Guard	Rear
3	N/A	Tilting Guard	Right

N/A = Part no longer available

© Copyright, Alliance Laundry Systems LLC – DO NOT COPY or TRANSMIT

Guards - 2-Way Tilting

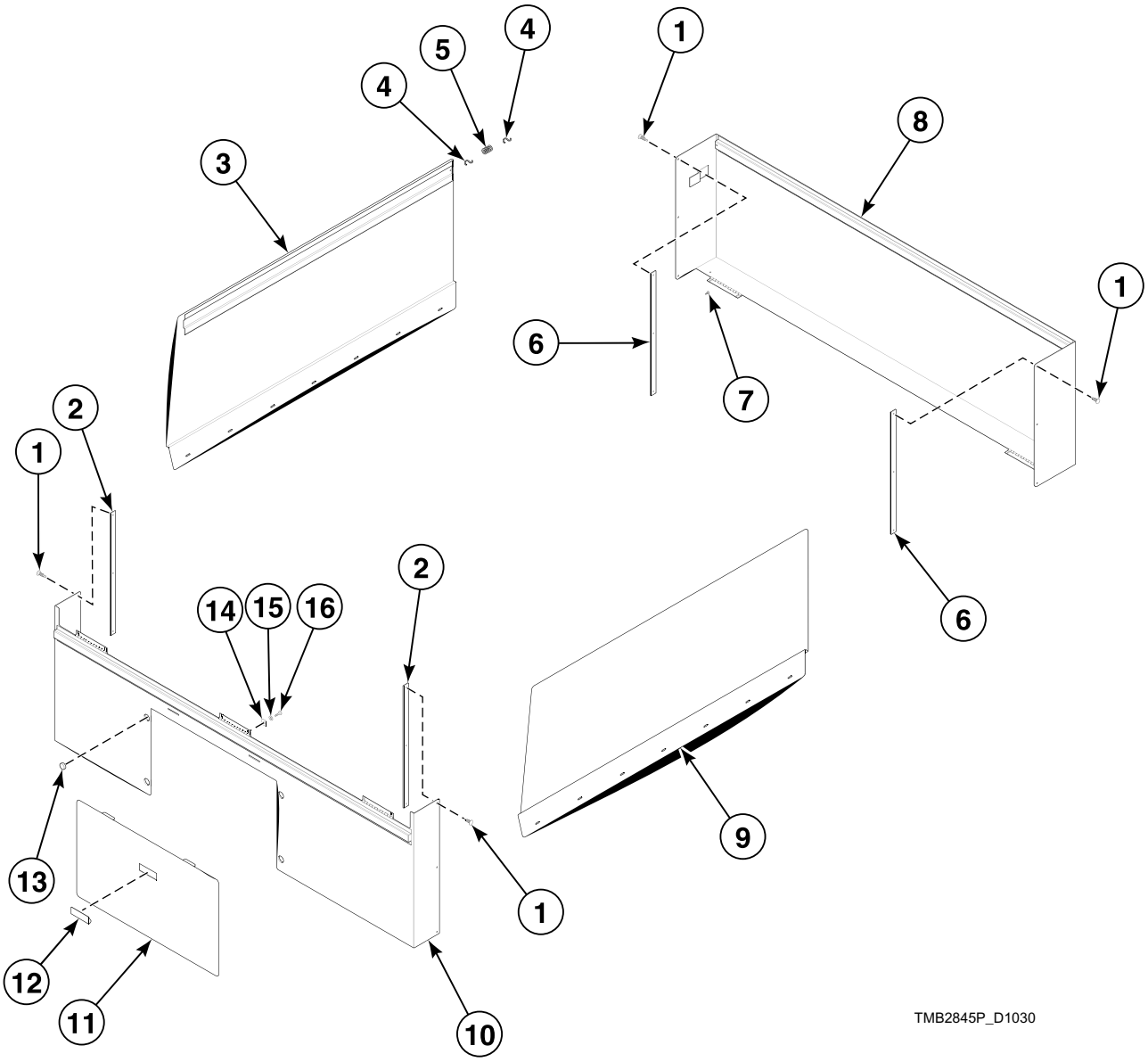

© Copyright, Alliance Laundry Systems LLC – DO NOT COPY or TRANSMIT

Guards - 2-Way Tilting

REF	PART NO.	DESCRIPTION	COMMENTS
1	SB-00949-0	Kickplate Fastener	Nylon
2	N/A	Rub Plate	Nylon; Front
3	N/A	Tilting Guard	Left
4	J17	S-Hook	
5	N/A	Spring	
6	N/A	Rub Plate	Nylon; Rear
7	N/A	Screw	No. 10; Pan head
8	N/A	Tilting Guard	Rear
9	N/A	Tilting Guard	Right
10	N/A	Tilting Guard	Front
11	N/A	Lint Drawer Cover	
12	N/A	Pocket Handle	
13	TU15536	Magnet	
14	TU4820	Washer	3/16 inch; Flat
15	21734	Washer	No. 8
16	AT383	Screw	No. 8; Truss head

N/A = Part no longer available

© Copyright, Alliance Laundry Systems LLC – DO NOT COPY or TRANSMIT

Manual Loading Door - Left

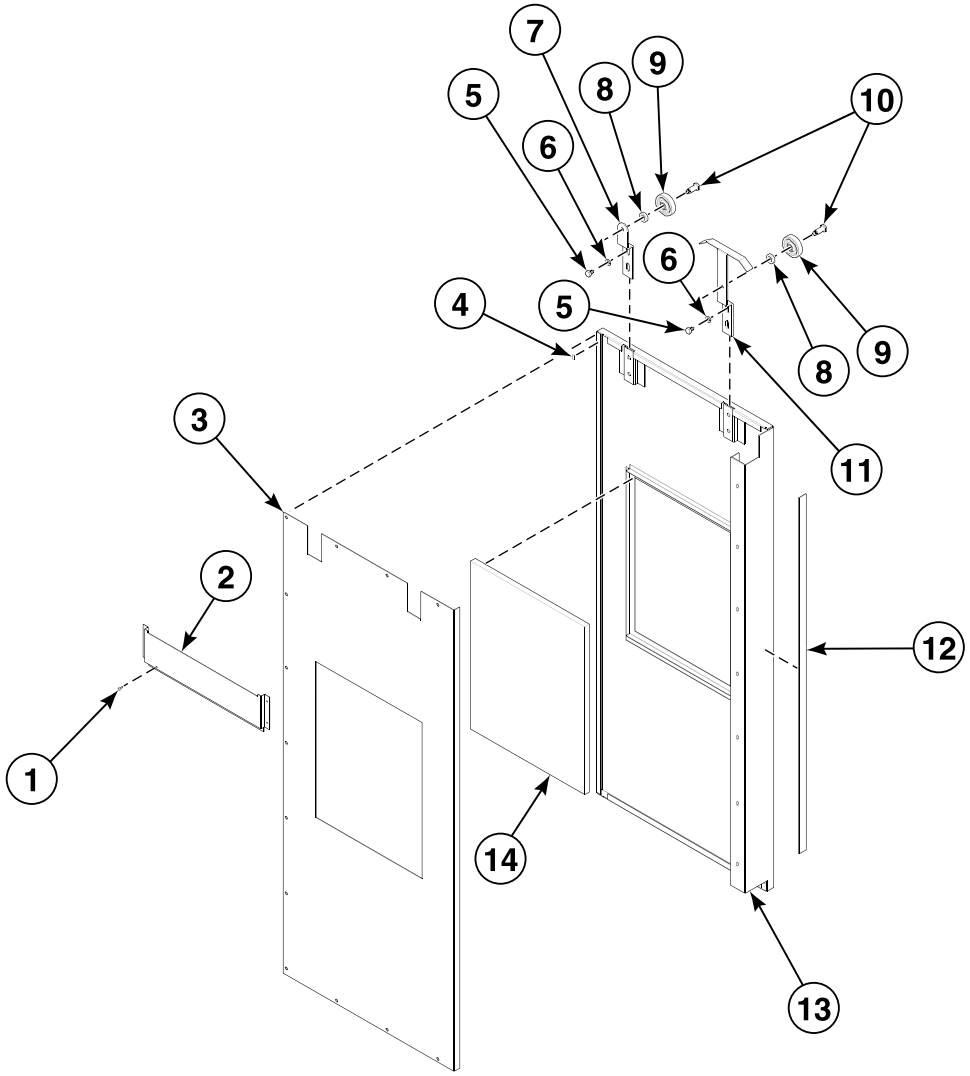

TMB2846P_D1030

© Copyright, Alliance Laundry Systems LLC – DO NOT COPY or TRANSMIT

Manual Loading Door - Left

REF	PART NO.	DESCRIPTION	COMMENTS
1	TUL336	Magnetic Tape	Sold per foot
2	TUL402	Pneumatic Door Bolt Cover Plate	
3	TUL401	Pneumatic Door Cover Plate	Left
4	FG344	Nut	Fast clip
5	F430923	Screw	1/4-20; Cap hex head
6	03189	Washer	1/4 inch
7	TUL184	Door Bracket	Back
8	M400080	Washer	5/16 inch
9	TUL345	Door Roller Assembly	
10	C1723	Screw	Shoulder
11	TUL195	Door Bracket	Front
12	LB55	Screw	No. 14; Sheet metal
13	TUL176	Loading Door Assembly	Left
14	TUL335	Loading Door Glass	

© Copyright, Alliance Laundry Systems LLC – DO NOT COPY or TRANSMIT

Manual Loading Door - Right

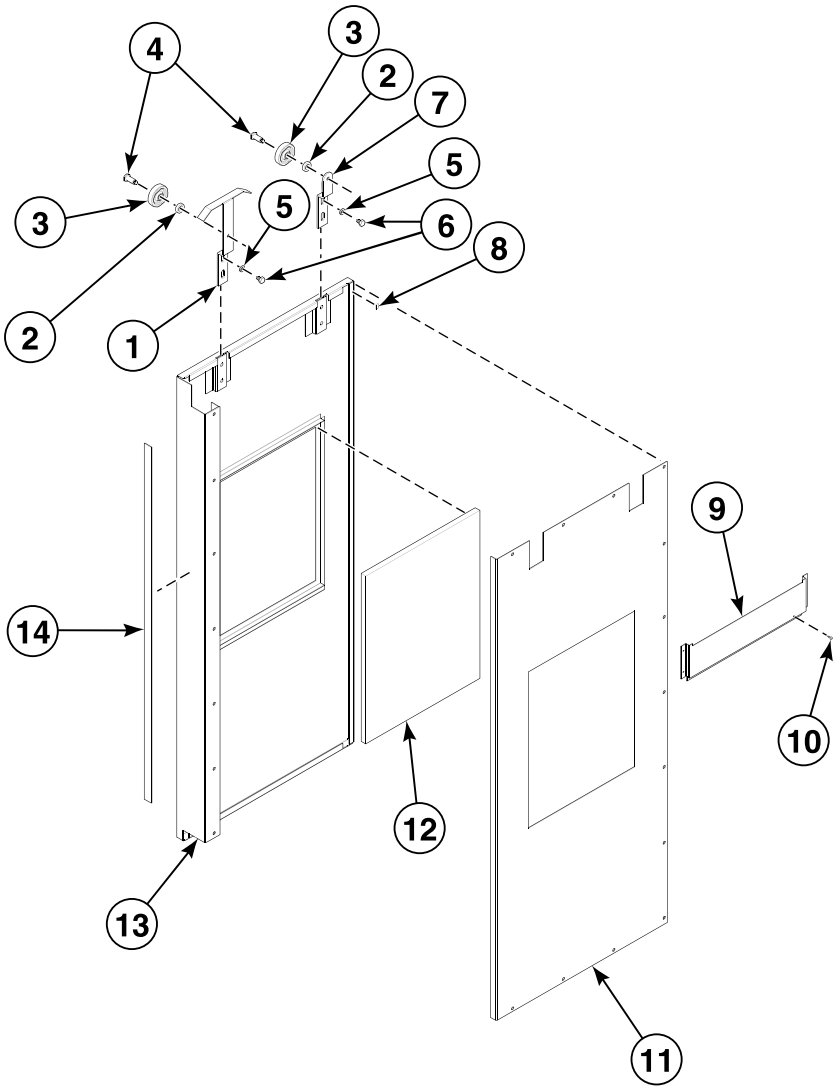

TMB2847P_D1030

© Copyright, Alliance Laundry Systems LLC – DO NOT COPY or TRANSMIT

Manual Loading Door - Right

REF	PART NO.	DESCRIPTION	COMMENTS
1	TUL195	Door Bracket	Front
2	M400080	Washer	5/16 inch
3	TUL345	Door Roller Assembly	
4	C1723	Screw	Shoulder
5	03189	Washer	1/4 inch
6	F430923	Screw	1/4-20; Cap hex head
7	TUL184	Door Bracket	Back
8	FG344	Nut	Fast clip
9	TUL402	Pneumatic Door Bolt Cover Plate	
10	TUL336	Magnetic Tape	Sold per foot
11	N/A	Door Cover	Right
12	TUL335	Loading Door Glass	
13	TUL177	Loading Door Assembly	Right
14	LB55	Screw	No. 14; Sheet metal

N/A = Part no longer available

© Copyright, Alliance Laundry Systems LLC – DO NOT COPY or TRANSMIT

Automatic Loading Door - Left

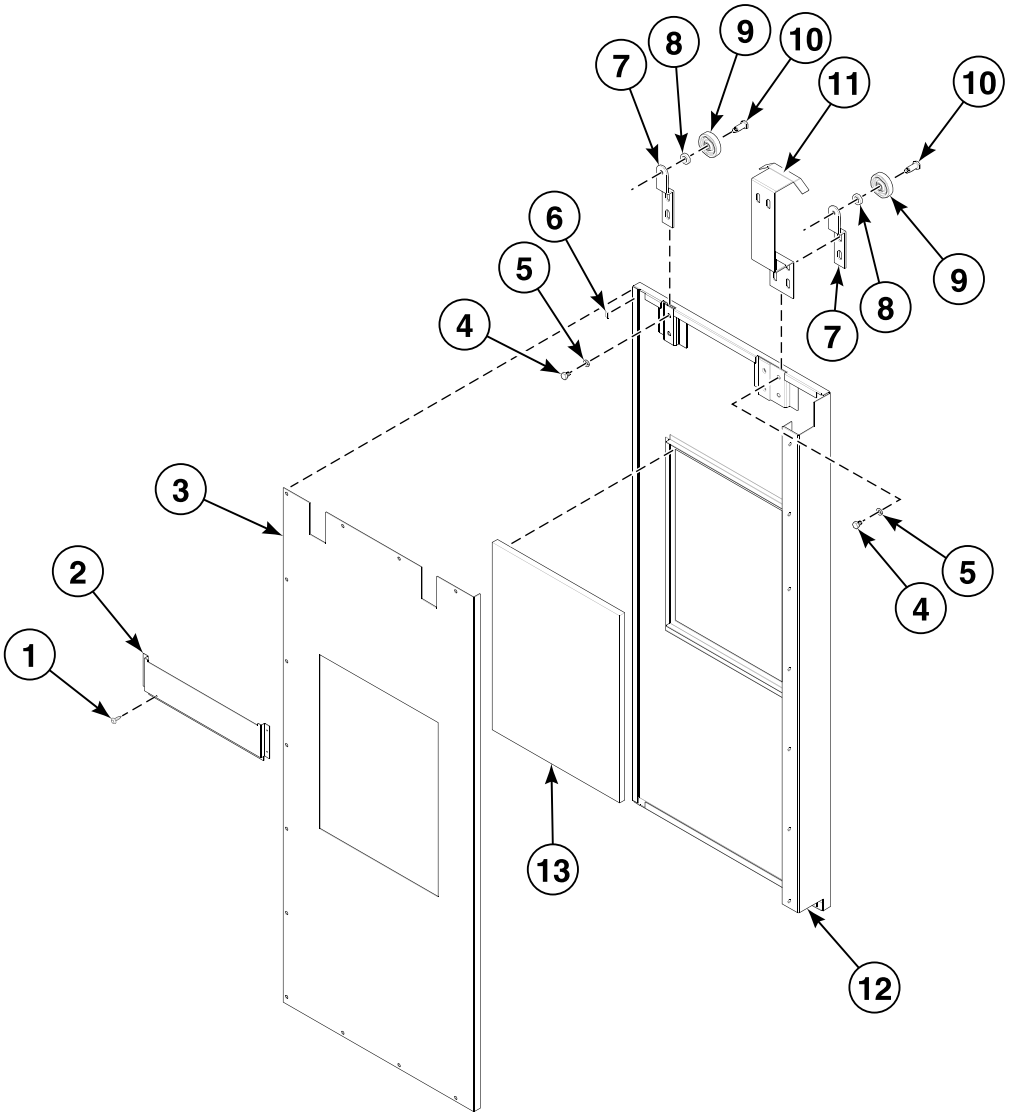

TMB2848P_D1030

© Copyright, Alliance Laundry Systems LLC – DO NOT COPY or TRANSMIT

Automatic Loading Door - Left

REF	PART NO.	DESCRIPTION	COMMENTS
1	LB55	Screw	No. 14; Sheet metal
2	TUL402	Pneumatic Door Bolt Cover Plate	
3	TUL401	Pneumatic Door Cover Plate	Left
4	F430923	Screw	1/4-20; Cap hex head
5	03189	Washer	1/4 inch
6	FG344	Nut	Fast clip
7	TUL184	Door Bracket	Back
8	M400080	Washer	5/16 inch
9	TUL345	Door Roller Assembly	
10	C1723	Screw	Shoulder
11	TUL396	Cylinder Mounting Bracket	
12	N/A	Loading Door	Left
13	TUL335	Loading Door Glass	

N/A = Part no longer available

© Copyright, Alliance Laundry Systems LLC – DO NOT COPY or TRANSMIT

Automatic Loading Door - Right

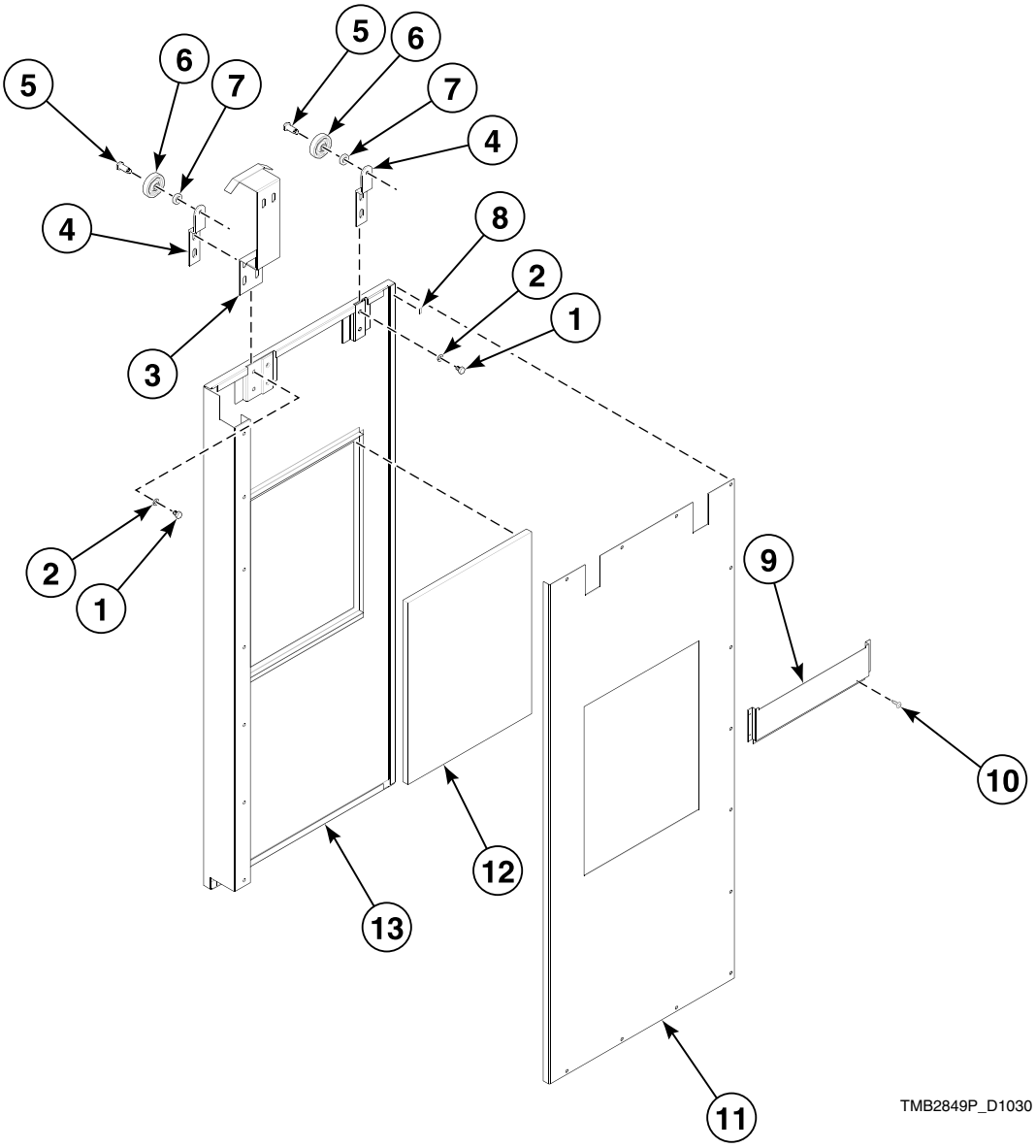

© Copyright, Alliance Laundry Systems LLC – DO NOT COPY or TRANSMIT

Automatic Loading Door - Right

REF	PART NO.	DESCRIPTION	COMMENTS
	TUL449	Loading Door Assembly	Right; Automatic
1	F430923	Screw	1/4-20; Cap hex head
2	03189	Washer	1/4 inch
3	TUL396	Cylinder Mounting Bracket	
4	TUL184	Door Bracket	Back
5	C1723	Screw	Shoulder
6	TUL345	Door Roller Assembly	
7	M400080	Washer	5/16 inch
8	FG344	Nut	Fast clip
9	TUL402	Pneumatic Door Bolt Cover Plate	
10	LB55	Screw	No. 14; Sheet metal
11	N/A	Door Cover	Right
12	TUL335	Loading Door Glass	
13	N/A	Loading Door	Right

N/A = Part no longer available

© Copyright, Alliance Laundry Systems LLC – DO NOT COPY or TRANSMIT

Loading Door Switches - Manual and Automatic

Manual Tilting, Automatic Tilting and Non-Tilting

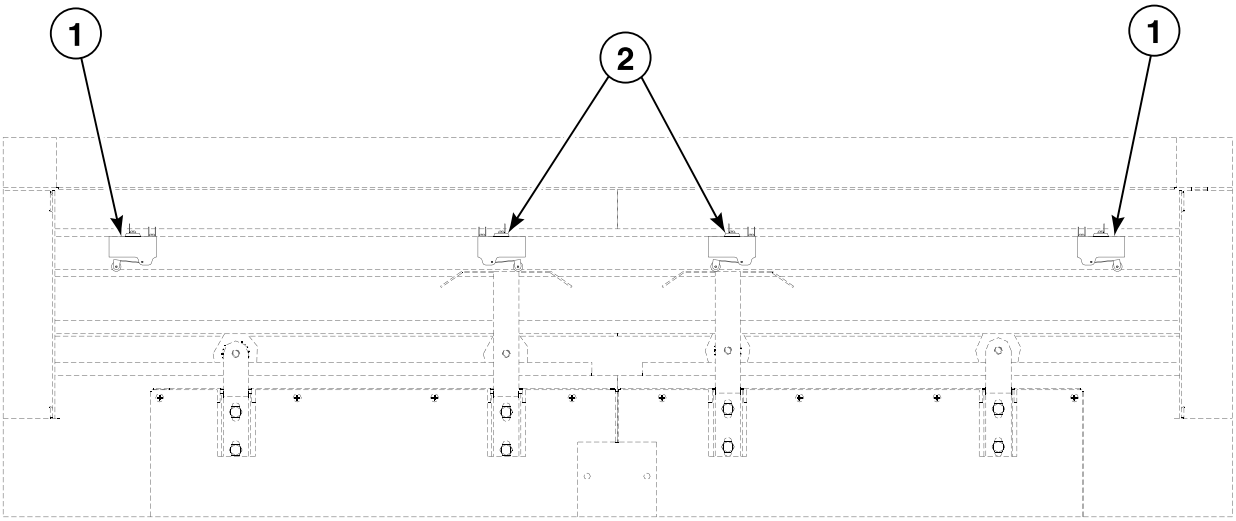

TMB2850P_D1030

© Copyright, Alliance Laundry Systems LLC – DO NOT COPY or TRANSMIT

Loading Door Switches - Manual and Automatic

REF	PART NO.	DESCRIPTION	COMMENTS
1	TU14482	Microswitch	
2	TU14482	Microswitch	DMP control
	TUL279	Lever Switch	Pro/ProHC control

© Copyright, Alliance Laundry Systems LLC – DO NOT COPY or TRANSMIT

Loading Door Switches - Manual Non-Tilting

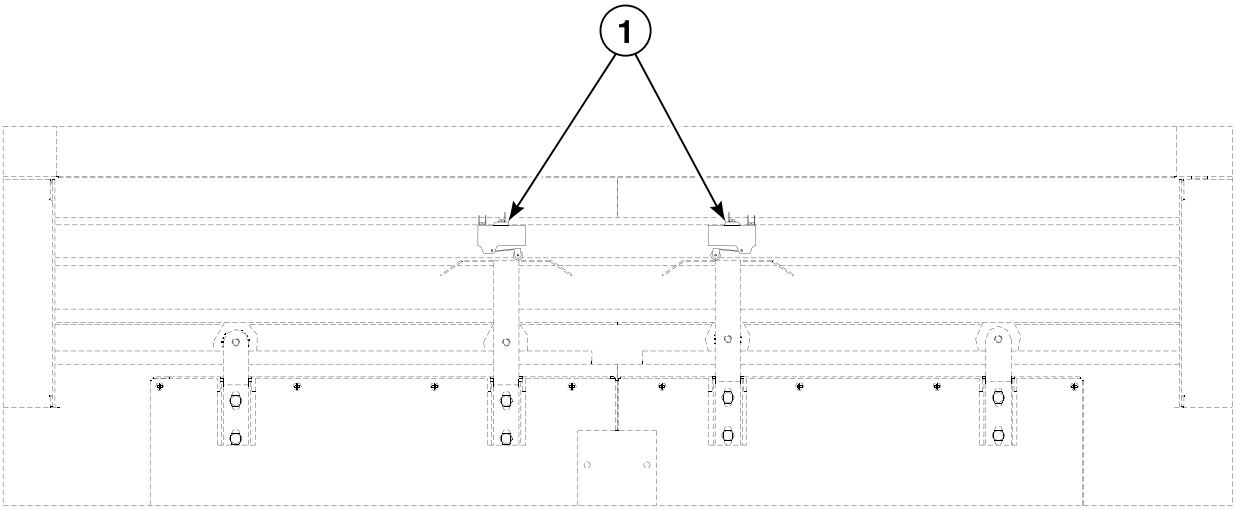

TMB2876P_D1030

© Copyright, Alliance Laundry Systems LLC – DO NOT COPY or TRANSMIT

Loading Door Switches - Manual Non-Tilting

REF	PART NO.	DESCRIPTION	COMMENTS
1	TU14482	Microswitch	

© Copyright, Alliance Laundry Systems LLC – DO NOT COPY or TRANSMIT

Guide Wheel Assembly - Front

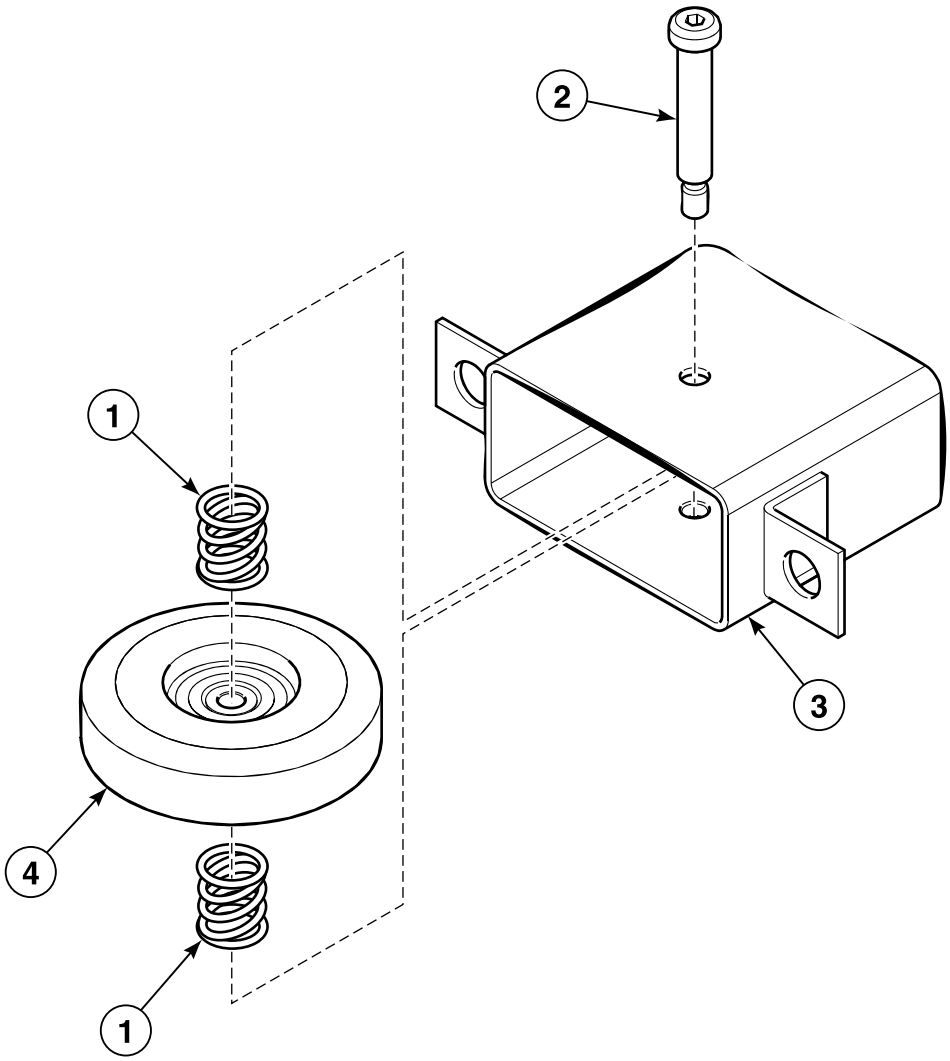

TMB2851P_D1030

© Copyright, Alliance Laundry Systems LLC – DO NOT COPY or TRANSMIT

Guide Wheel Assembly - Front

REF	PART NO.	DESCRIPTION	COMMENTS
1	TUL159	Spring	
2	TUL158	Bolt	Shoulder
3	TUL136	Retaining Tube	Front
4	TUL312	Basket Guide Wheel Assembly	

© Copyright, Alliance Laundry Systems LLC – DO NOT COPY or TRANSMIT

Guide Wheel Assembly - Rear

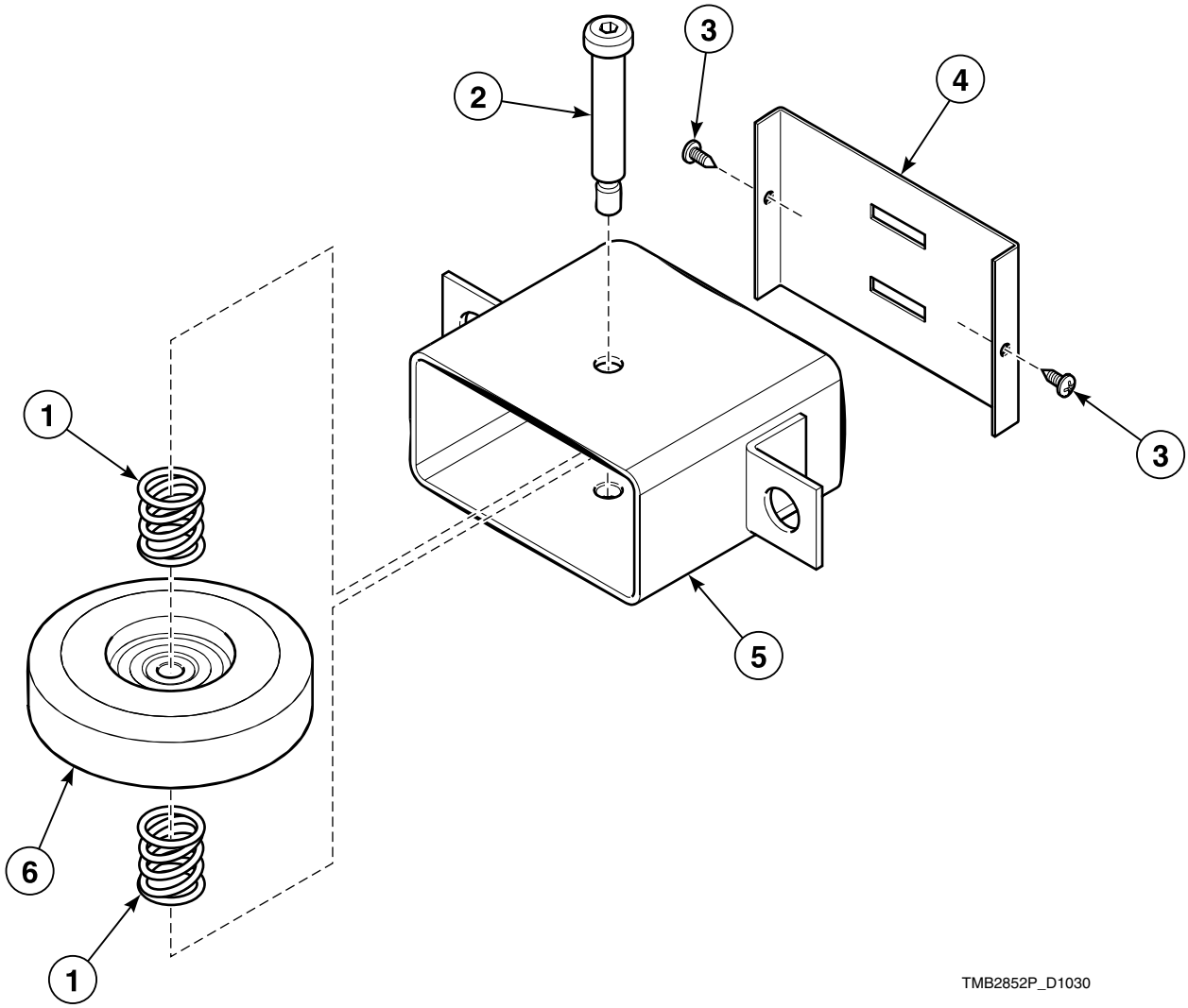

© Copyright, Alliance Laundry Systems LLC – DO NOT COPY or TRANSMIT

Guide Wheel Assembly - Rear

REF	PART NO.	DESCRIPTION	COMMENTS
	TUL317	Basket Guide Wheel Assembly	Rear
1	TUL159	Spring	
2	TUL158	Bolt	Shoulder
3	TU7733	Screw	
4	N/A	Guide Wheel Cover	
5	TUL313	Retaining Tube	Rear
6	TUL312	Basket Guide Wheel Assembly	

N/A = Part no longer available

© Copyright, Alliance Laundry Systems LLC – DO NOT COPY or TRANSMIT

Guide Wheel

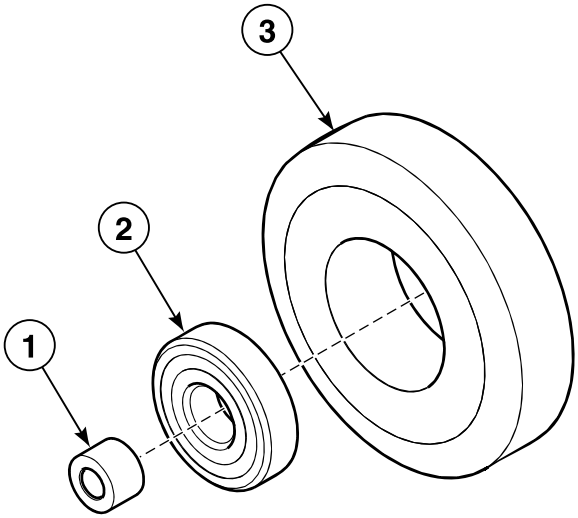

TMB2853P_D1030

© Copyright, Alliance Laundry Systems LLC – DO NOT COPY or TRANSMIT

Guide Wheel

REF	PART NO.	DESCRIPTION	COMMENTS
	TUL312	Basket Guide Wheel Assembly	
1	N/A	Bearing	1/2 inch long; Bronze
2	TUL314	Bearing	
3	TUL156	Basket Guide Wheel	

N/A = Part no longer available

© Copyright, Alliance Laundry Systems LLC – DO NOT COPY or TRANSMIT

Inverter

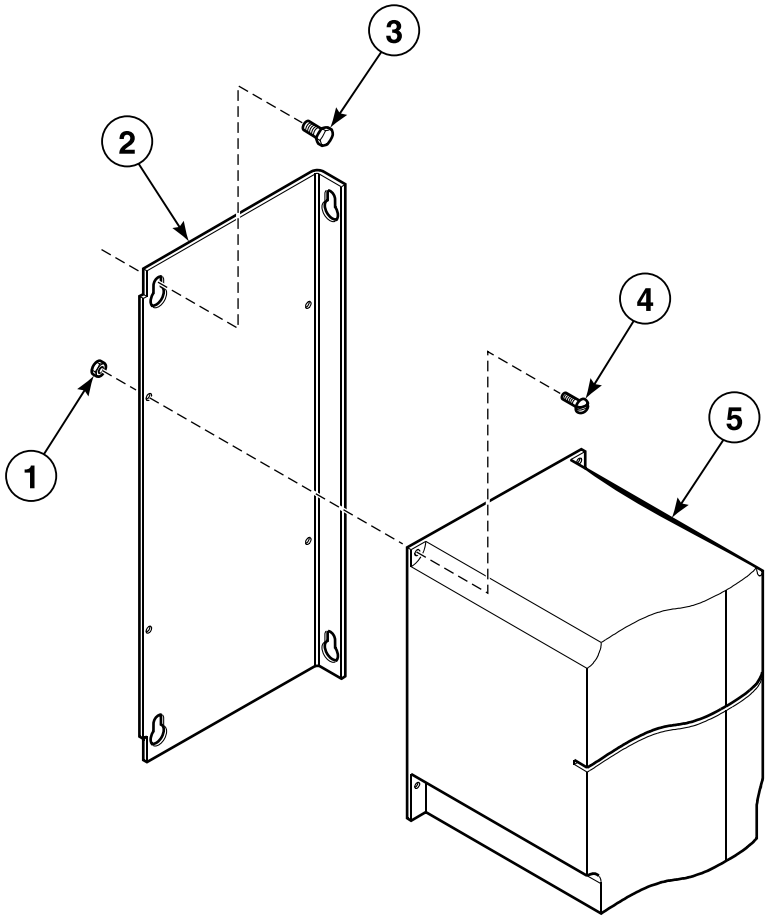

TMB2854P_D1030

© Copyright, Alliance Laundry Systems LLC – DO NOT COPY or TRANSMIT

Inverter

REF	PART NO.	DESCRIPTION	COMMENTS
1	N/A	Nut	No. 8-32
2	N/A	Mounting Bracket	
3	02422	Screw	1/4-20; Hex head
4	AT383	Screw	No. 8-32; Machine
5	TUL536	Inverter	3 hp; 200-240 Volt
	TUL537	Inverter	4 hp; 380-480 Volt

N/A = Part no longer available

© Copyright, Alliance Laundry Systems LLC – DO NOT COPY or TRANSMIT

Air Switch Assembly

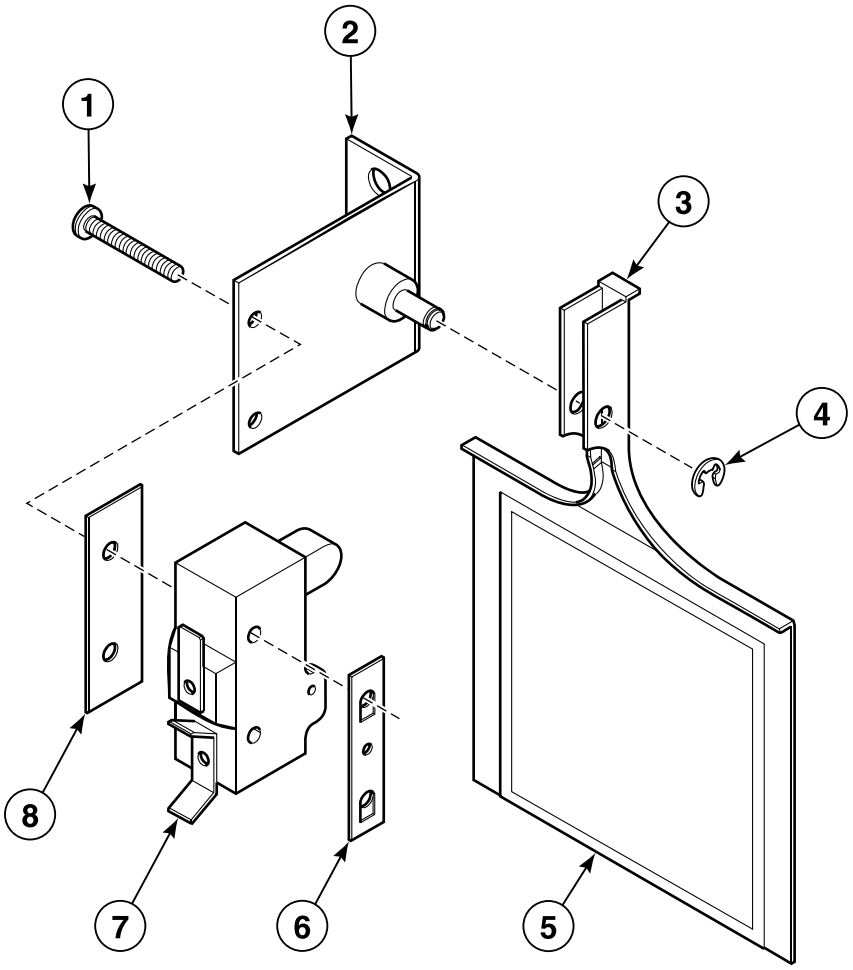

TMB2433P_D1030

© Copyright, Alliance Laundry Systems LLC – DO NOT COPY or TRANSMIT

Air Switch Assembly

REF	PART NO.	DESCRIPTION	COMMENTS
	TU8206	Air Switch Kit	
	TU7733	Screw	No. 8 x 1/2; Sheet metal
1	TU3219	Screw	No. 6 x 1; Sheet metal
2	TU8171	Air Switch Mounting Bracket	
3	TU2463	Actuator Arm	
4	F888	E-Ring	
5	TU3476	Label	
6	TU1771	Nut	No. 6; Tinnerman
7	TU14482	Microswitch	
8	TU1770	Air Switch Insulator	

© Copyright, Alliance Laundry Systems LLC – DO NOT COPY or TRANSMIT

Motor Control Assembly

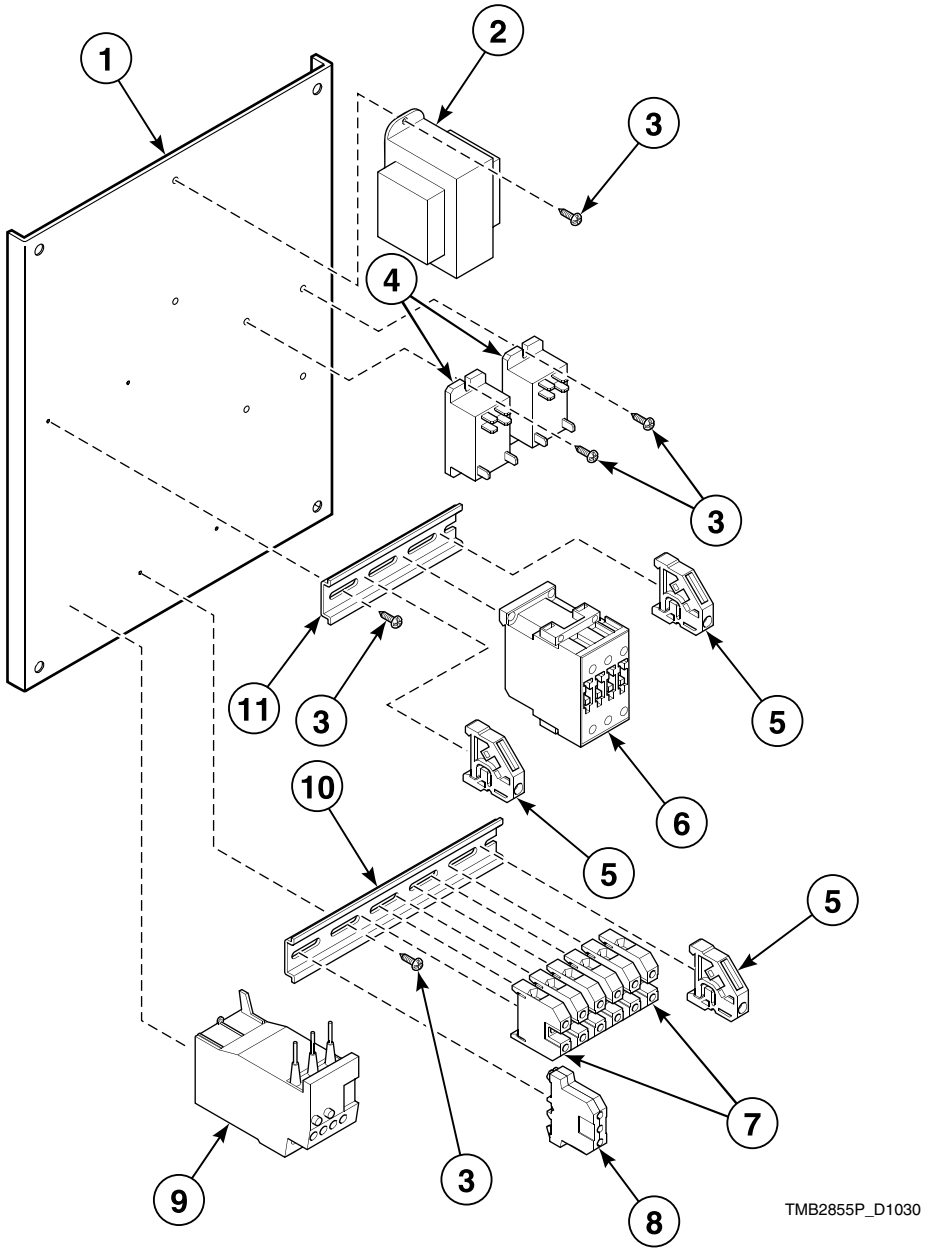

© Copyright, Alliance Laundry Systems LLC – DO NOT COPY or TRANSMIT

Motor Control Assembly

REF	PART NO.	DESCRIPTION	COMMENTS
1	N/A	Subplate	
2	TU13802P	Transformer	240 or 460 Volt; 24 Volt
	N/A	Transformer	575 Volt; 24 Volt
3	TU7733	Screw	No. 8
4	F1300P	Relay	
5	TU14959	Terminal Block End Retainer	
6	TUL276P	Contactor	25 Amp; 24 Volt
7	TU14958	Terminal Block	
8	TU15007	Ground/End Terminal Block	
9	TU14707	Overload	14-20 Amp
	N/A	Overload	7-10 Amp
	TU15593	Overload	5.5-8 Amp
10	TU14986	Din Rail	4 1/2 inches long
11	TUL289	Din Rail	7 1/2 inches long

N/A = Part no longer available

© Copyright, Alliance Laundry Systems LLC – DO NOT COPY or TRANSMIT

Basket Drive

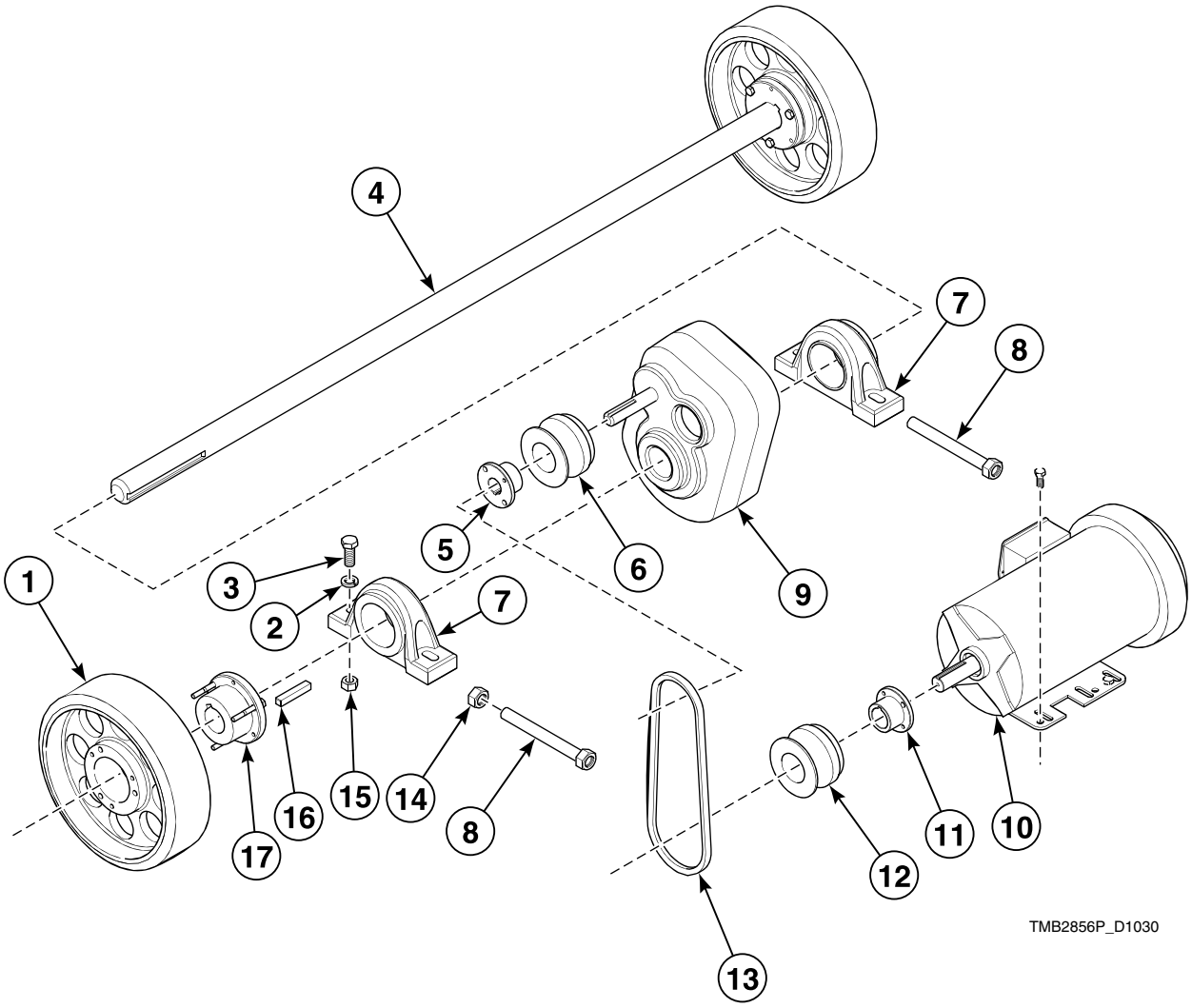

© Copyright, Alliance Laundry Systems LLC – DO NOT COPY or TRANSMIT

Basket Drive

REF	PART NO.	DESCRIPTION	COMMENTS
1	TUL109	Basket Wheel	10 inch diameter
2	TU2831	Washer	1/2 inch
3	H88012034	Screw	1/2-13
4	N/A	Basket Support Shaft	
	N/A	Basket Idler Shaft	
5	TU3807	Sheave Bushing	3/4 inch
6	TU8445	Sheave	MAL39
7	TU13334	Pillow Block Bearing	7/16 inch
8	TUX575	Adjustment Rod Weldment	
9	TUL182	Gear Box Assembly	Includes torque arm
10	MTR318	Motor	3 hp
11	TU6723	Lock Bushing	1-1/8 inch
12	N/A	Sheave	MAL32; 60 Hertz
	TU8445	Sheave	MAL39; 50 Hertz
13	TUL353	Belt	
14	TU2881	Nut	5/8-18; Hex
15	N/A	Nut	1/2-13
16	N/A	Key	3/8 sq. x 2 1/4 inch long
	N/A	Key	3/8 sq. x 5 3/4 inch long; Rotation sensor
17	TUX461	Idler Bushing	7/16 inch

N/A = Part no longer available

© Copyright, Alliance Laundry Systems LLC – DO NOT COPY or TRANSMIT

Fan Assembly - Gas and Steam

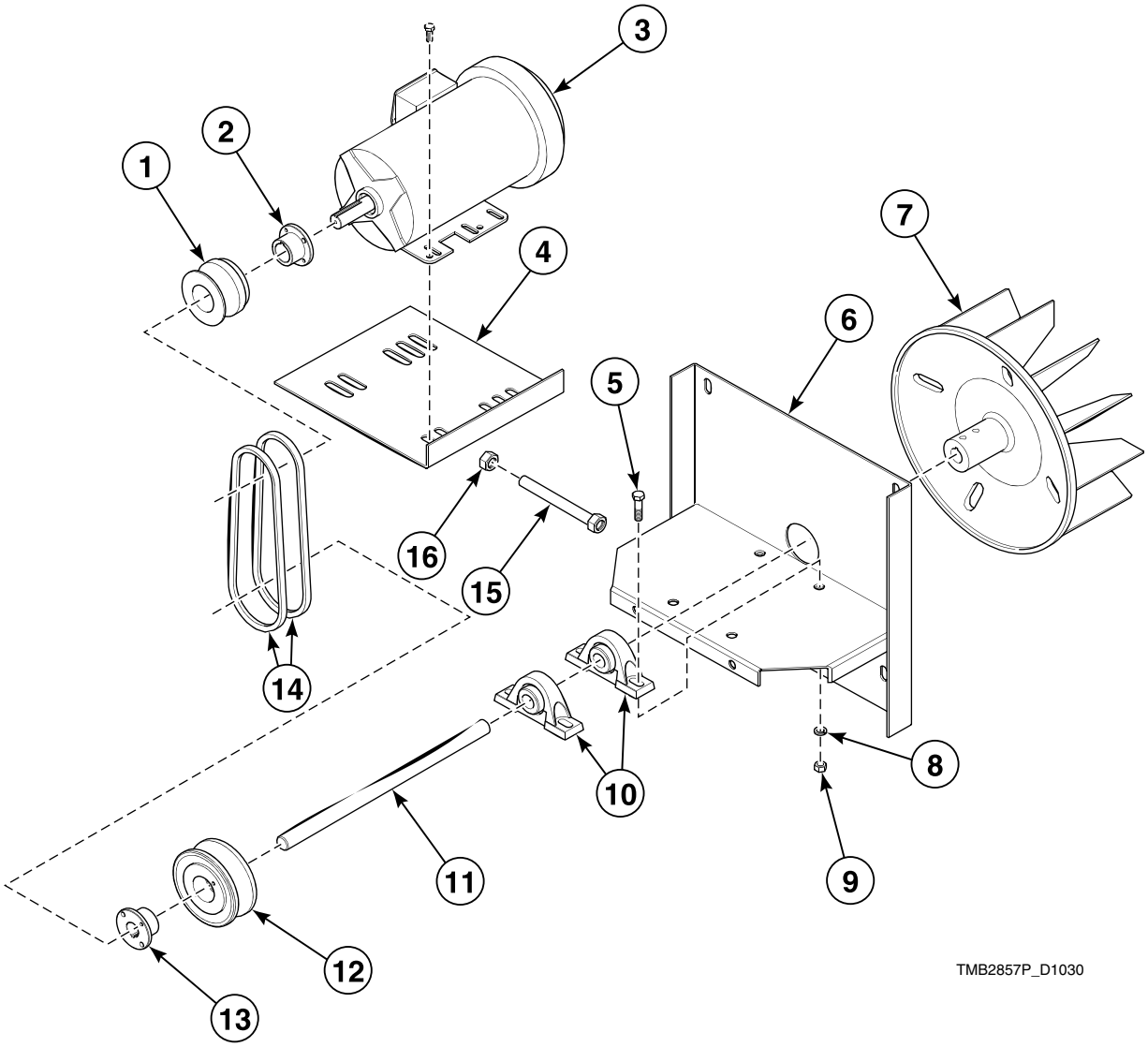

© Copyright, Alliance Laundry Systems LLC – DO NOT COPY or TRANSMIT

Fan Assembly - Gas and Steam

REF	PART NO.	DESCRIPTION	COMMENTS
	TU15155	Bushing	
1	C000472	Motor Pulley	2MBL33
2	TU6723	Lock Bushing	Gas models; 1 1/8 inch
	TU15506	Bushing	Steam models; 1 3/8 inch
3	MTR319	Motor	Gas models; 7 1/2 hp
	N/A	Motor	Steam models; 10 hp
4	N/A	Motor Tension Plate	
5	OP380	Screw	3/8-16; Cap hex head
6	N/A	Fan Mount	
7	TUX220	Induction Fan	
8	TU4787	Nut	3/8-16 inch; Hex
9	VSB134	Washer	3/8 inch; Split
10	TUX429	Pillow Block	7/8 inch; Bearing
11	N/A	Fan Idler Shaft	
12	N/A	Sheave	Gas models: 50 Hertz; Steam models: 60 Hertz; 2MB39L
	TUX595	Sheave	Gas models; 2MB44L; 60 Hertz
	N/A	Sheave	Steam models; 2MB37L; 50 Hertz
13	F280214	Motor Bushing	7/8 inch
14	TUL528	Belt	BX45; Fan
15	TUX575	Adjustment Rod Weldment	
16	TU2881	Nut	5/8-18; Hex

N/A = Part no longer available

© Copyright, Alliance Laundry Systems LLC – DO NOT COPY or TRANSMIT

DMP Thermostat Assembly

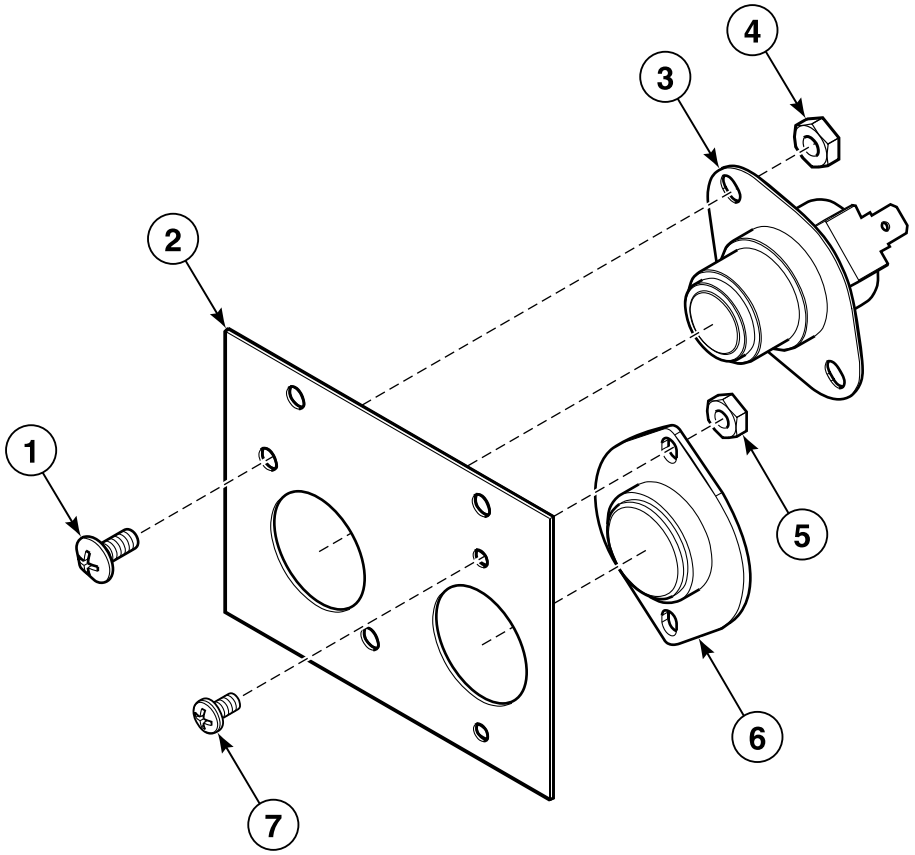

TMB2428P_D1030

© Copyright, Alliance Laundry Systems LLC – DO NOT COPY or TRANSMIT

DMP Thermostat Assembly

REF	PART NO.	DESCRIPTION	COMMENTS
	TU15538	Thermostat and Bracket Assembly	DMP
1	M262	Screw	No. 8-32
2	TU15537	Thermostat Bracket	
3	EA-00411-0	Temperature Switch	220 degrees
4	TU3266	Nut	No. 8-32; Hex; Brass
5	TU3400	Nut	No. 6-32; Hex; Brass
6	TU11991K	Thermistor Kit	
7	M400072	Screw	No. 6-32

© Copyright, Alliance Laundry Systems LLC – DO NOT COPY or TRANSMIT

FDS Thermostat

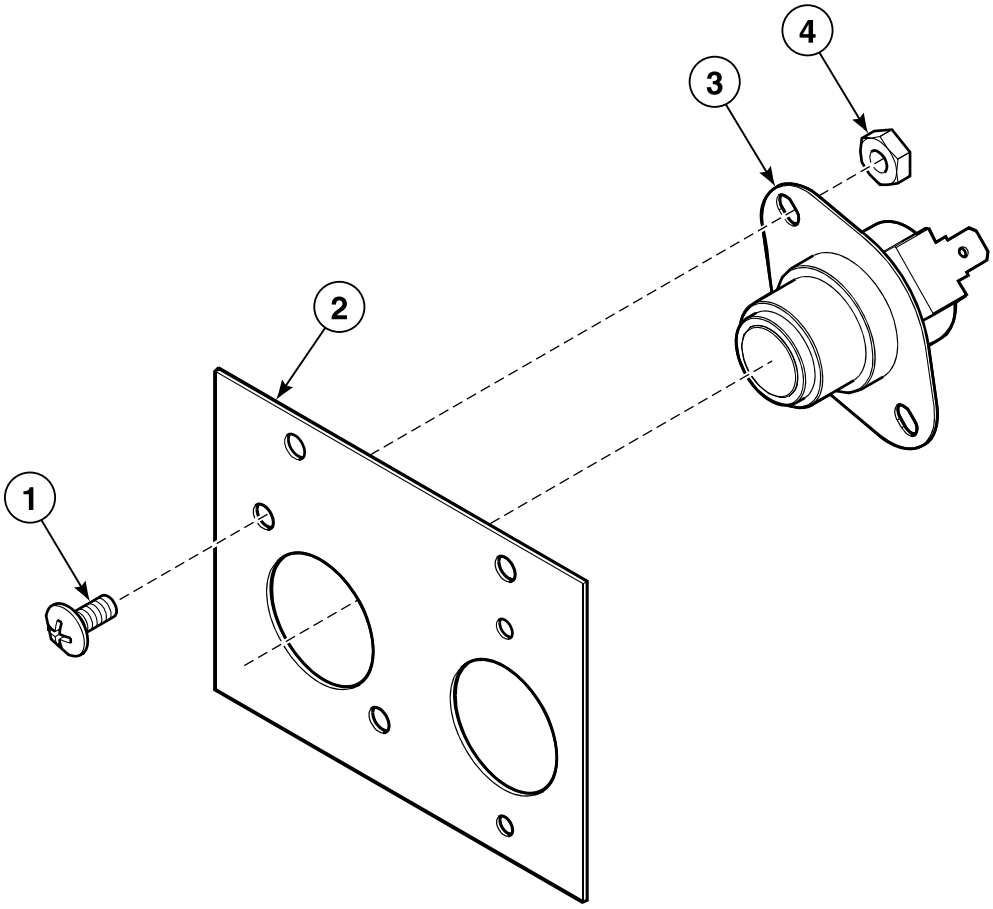

TMB2858P_D1030

© Copyright, Alliance Laundry Systems LLC – DO NOT COPY or TRANSMIT

FDS Thermostat

REF	PART NO.	DESCRIPTION	COMMENTS
	TU15855	Thermostat Assembly	
1	M262	Screw	No. 8-32
2	TU15537	Thermostat Bracket	
3	TUX613	Thermostat	280 degrees
4	TU3266	Nut	No. 8-32; Hex; Brass

© Copyright, Alliance Laundry Systems LLC – DO NOT COPY or TRANSMIT

Pro Sensor Assembly

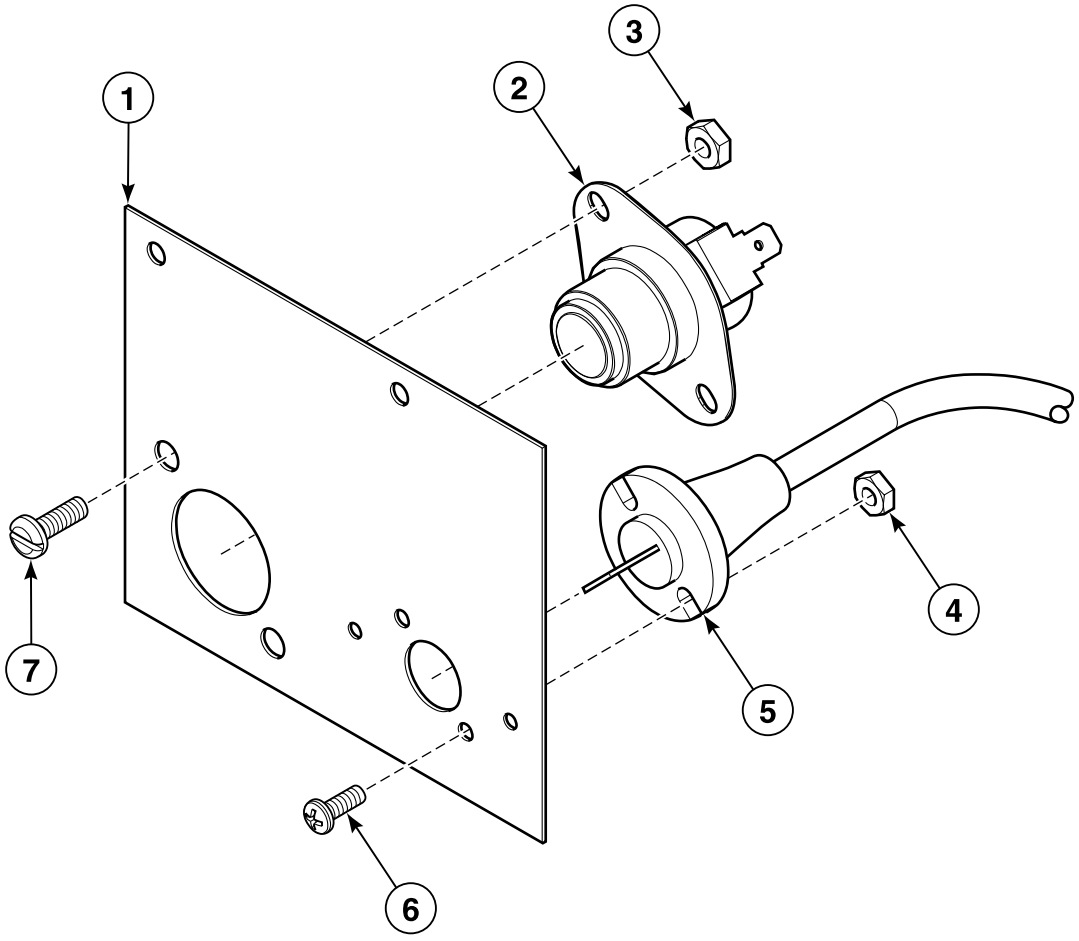

TMB2430P_D1030

© Copyright, Alliance Laundry Systems LLC – DO NOT COPY or TRANSMIT

Pro Sensor Assembly

REF	PART NO.	DESCRIPTION	COMMENTS
	TU15464	Sensor Assembly	
1	N/A	Thermostat	No. AR594
2	EA-00411-0	Temperature Switch	220 degrees
3	TU3266	Nut	No. 8-32; Hex
4	TU3400	Nut	No. 6-32; Hex
5	254/00072/10	Temperature Sensor	
6	SB-00952-0	Screw	No. 6-32 x 3/8; Pan head
7	SB-00828-0	Screw	No. 8-32 x 1/2; Machine pan head

N/A = Part no longer available

© Copyright, Alliance Laundry Systems LLC – DO NOT COPY or TRANSMIT

ProHC Sensor Assembly - Upper Assembly

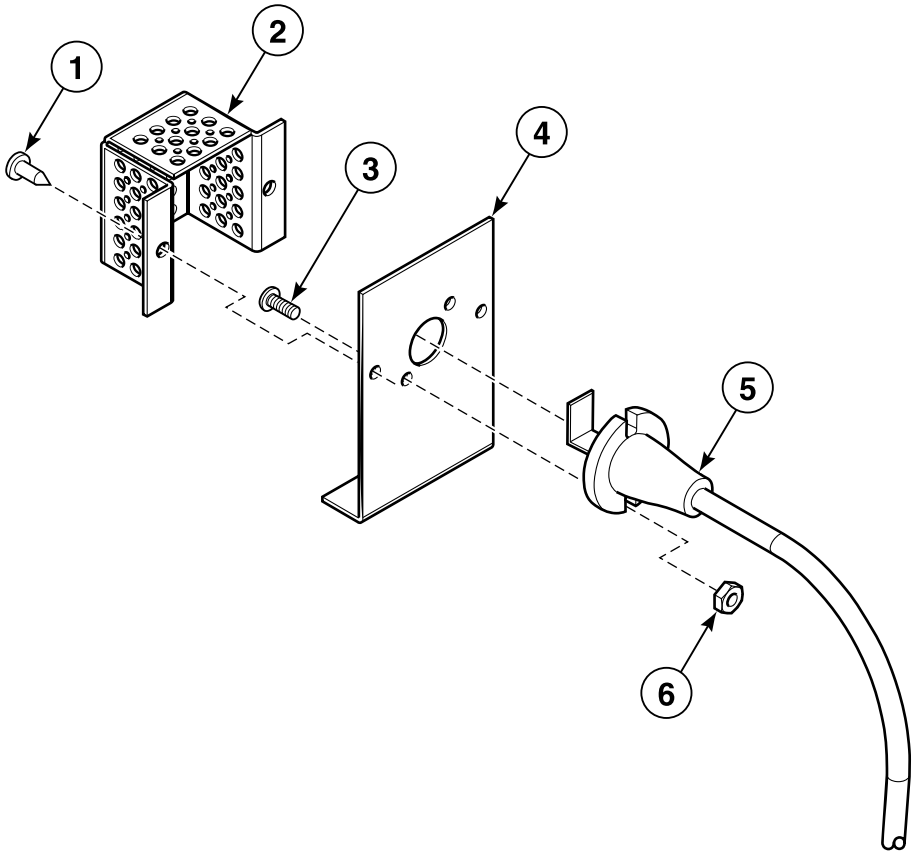

TMB2431P_D1030

© Copyright, Alliance Laundry Systems LLC – DO NOT COPY or TRANSMIT

ProHC Sensor Assembly - Upper Assembly

REF	PART NO.	DESCRIPTION	COMMENTS
	TU14724	ProHC Upper Sensor Assembly	
1	TU7733	Screw	No. 8-18 x 1/2 inch long; Self-drill
2	TU14694	Probe Cover Plate	
3	SB-00952-0	Screw	No. 6-32 x 3/8 inch long
4	TU14693	Upper Probe Mounting Plate	
5	254/00071/10	Temperature and Humidity Sensor	
6	TU3400	Nut	No. 6-32

© Copyright, Alliance Laundry Systems LLC – DO NOT COPY or TRANSMIT

ProHC Sensor Assembly - Lower Assembly

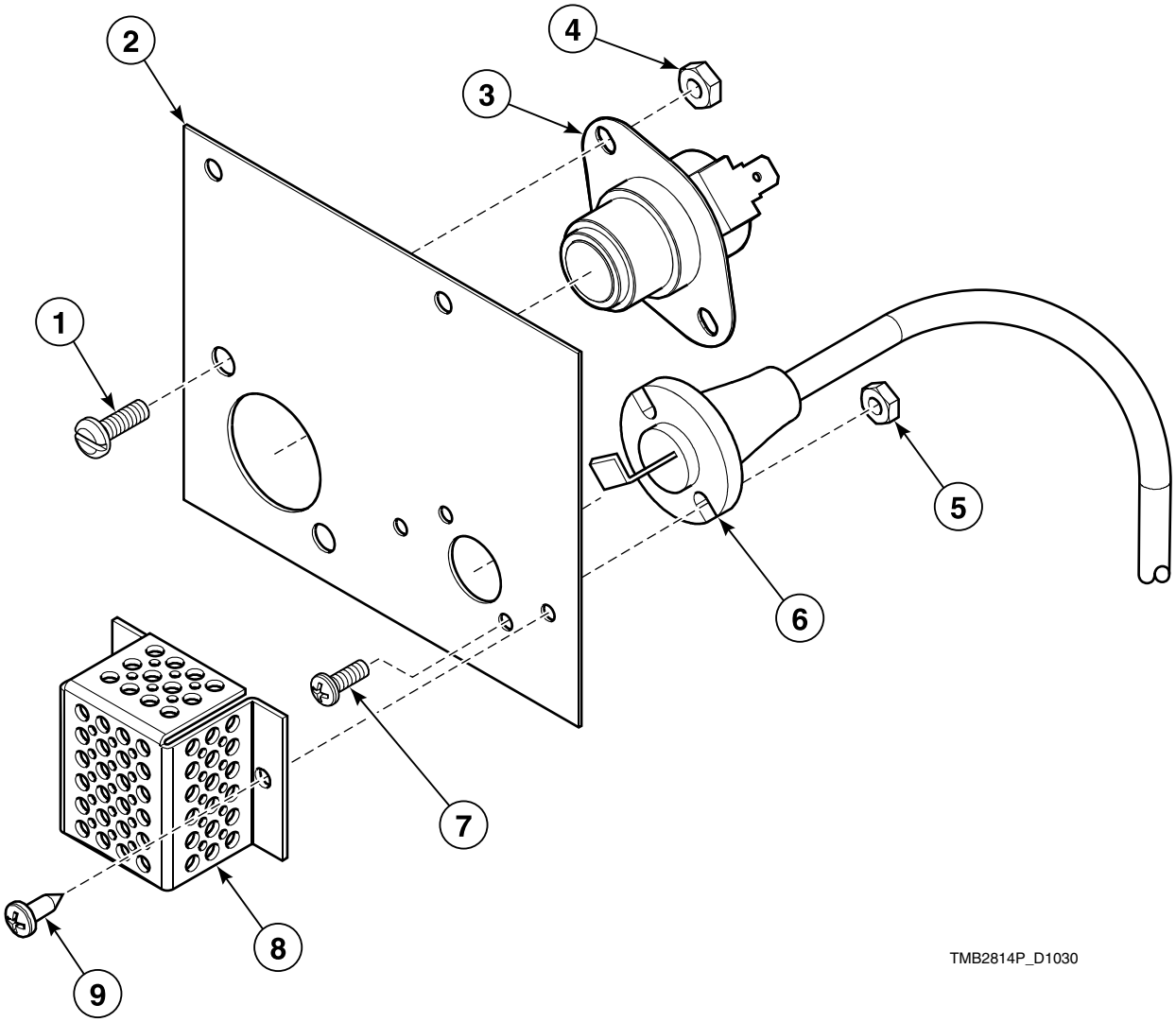

© Copyright, Alliance Laundry Systems LLC – DO NOT COPY or TRANSMIT

ProHC Sensor Assembly - Lower Assembly

REF	PART NO.	DESCRIPTION	COMMENTS
1	SB-00828-0	Screw	No. 8-32 x 1/2 inch long; Machine
2	CA-13067-0	Sensor Bracket	
3	EA-00411-0	Temperature Switch	220 degrees
4	TU3266	Nut	No. 8-32; Hex; Brass
5	TU3400	Nut	No. 6-32; Hex; Brass
6	254/00071/10	Temperature and Humidity Sensor	
7	SB-00952-0	Screw	No. 6-32 x 3/8 inch long
8	TU14694	Probe Cover Plate	
9	TU7733	Screw	No. 8-18 x 1/2 inch long; Self-drill

© Copyright, Alliance Laundry Systems LLC – DO NOT COPY or TRANSMIT

Ram Ignition Assembly

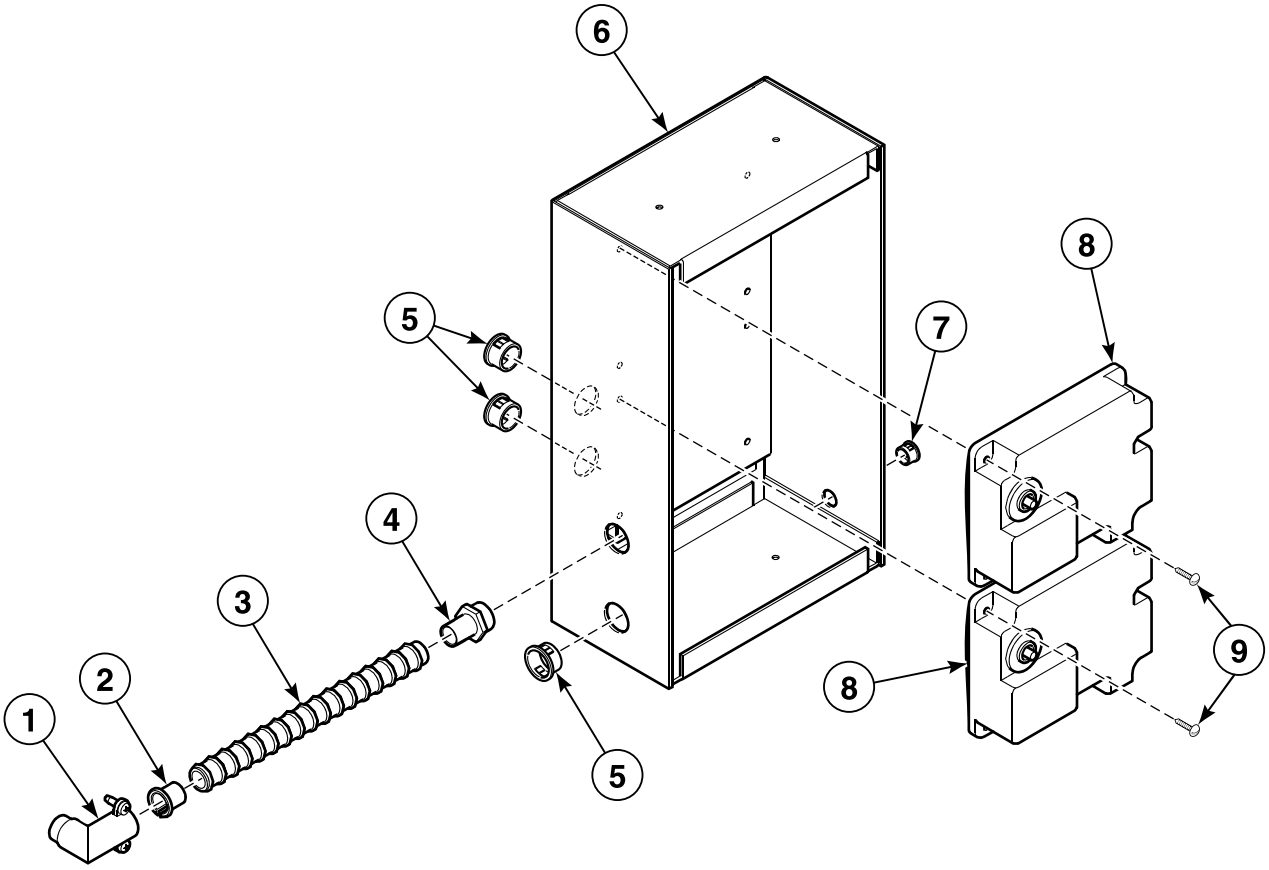

TMB2859P_D1030

© Copyright, Alliance Laundry Systems LLC – DO NOT COPY or TRANSMIT

Ram Ignition Assembly

REF	PART NO.	DESCRIPTION	COMMENTS
1	TU4791	Angle Connector	1/2 inch
2	TU5431	Sleeve Bushing	Red
3	CFB7200	Cable	1/2 inch x 72 inches long; Greenfield
4	TU4790	Connector	1/2 inch; Straight
5	TU2372	Snap Bushing	7/8 inch
6	N/A	Ram Ignition Box	
7	TU10193	Bushing	1/2 inch
8	GA-11007-0P	Igniter Module	CE; 50 Hertz
	GA-00765-0P	Igniter	CE; 60 Hertz
9	TU2793	Screw	No. 8

N/A = Part no longer available

© Copyright, Alliance Laundry Systems LLC – DO NOT COPY or TRANSMIT

Electrical Connection Box

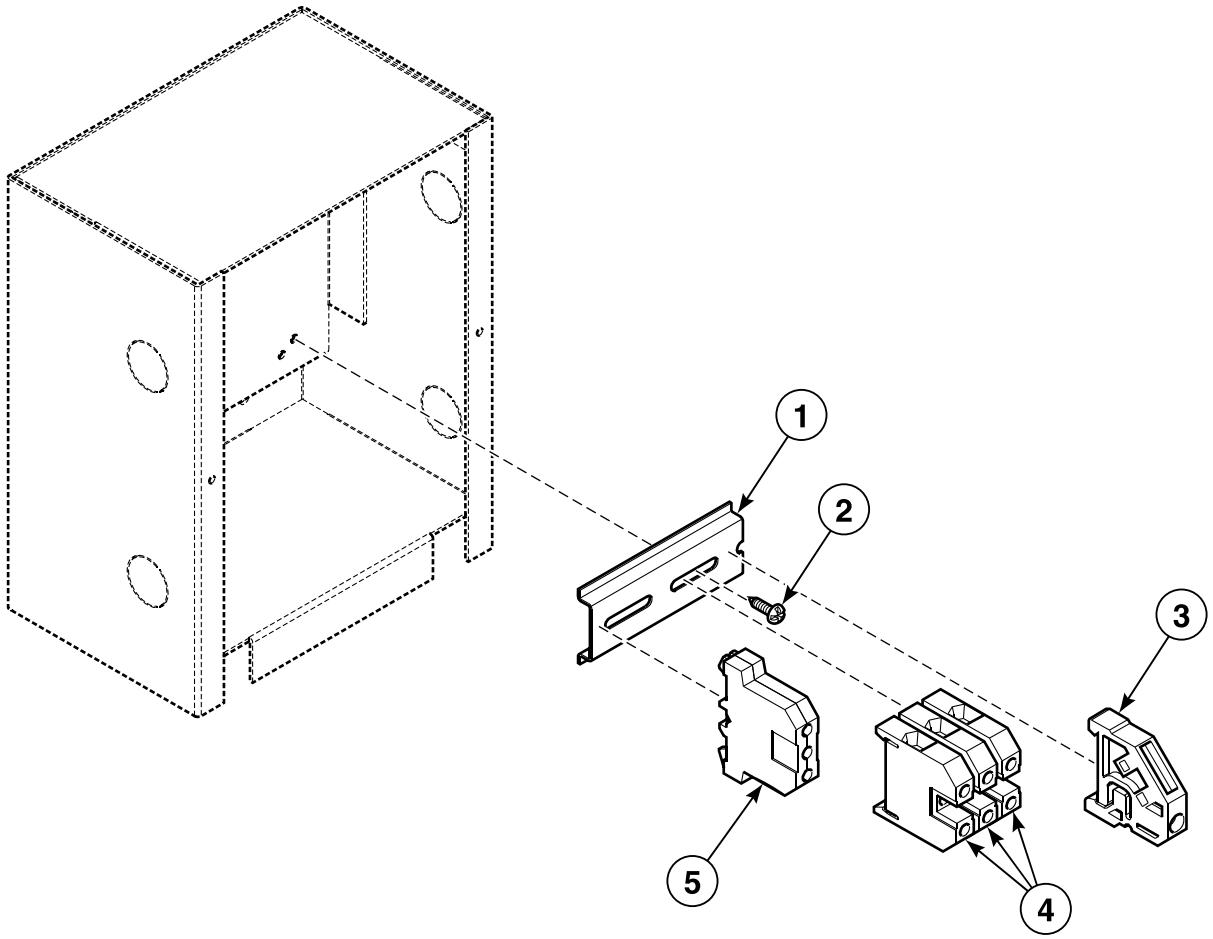

TMB2860P_D1030

© Copyright, Alliance Laundry Systems LLC – DO NOT COPY or TRANSMIT

Electrical Connection Box

REF	PART NO.	DESCRIPTION	COMMENTS
1	N/A	Din Rail	3 1/4 inch long
2	TU7733	Screw	No. 8-32
3	TU14959	Terminal Block End Retainer	
4	TU14958	Terminal Block	
5	TU15007	Ground/End Terminal Block	

N/A = Part no longer available

© Copyright, Alliance Laundry Systems LLC – DO NOT COPY or TRANSMIT

Pneumatic Box - Non-Tilting with Automatic Doors

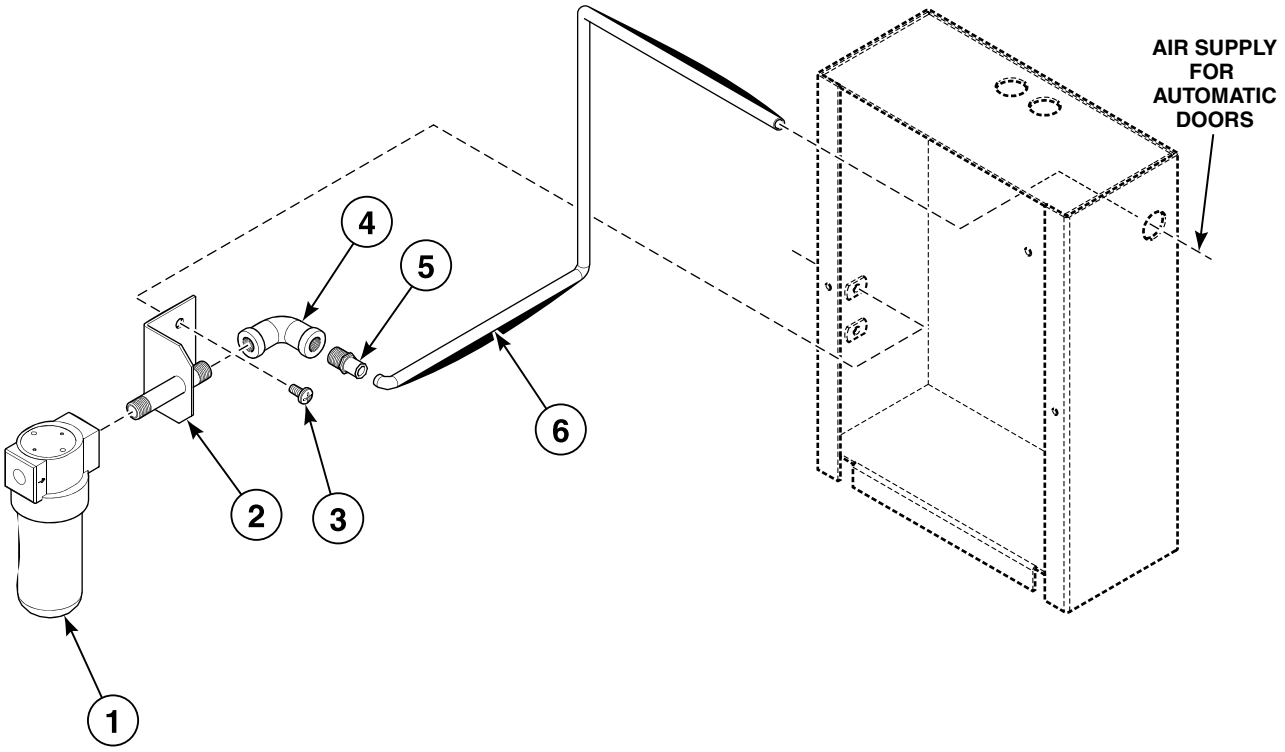

TMB2861P_D1030

© Copyright, Alliance Laundry Systems LLC – DO NOT COPY or TRANSMIT

Pneumatic Box - Non-Tilting with Automatic Doors

REF	PART NO.	DESCRIPTION	COMMENTS
1	PT663	Regulator Filter	
2	N/A	Regulator Bracket	
3	SB-00921-0	Screw	1/4-20 x 1/2 inch long; Round head
4	N/A	Elbow	1/4 inch
5	PR418	Straight Fitting	1/4 inch x 1/4 inch
6	N/A	Tubing	1/4 inch; Nylon

N/A = Part no longer available

© Copyright, Alliance Laundry Systems LLC – DO NOT COPY or TRANSMIT

Pneumatic Box - 1-Way Tilting with Manual and Automatic Doors

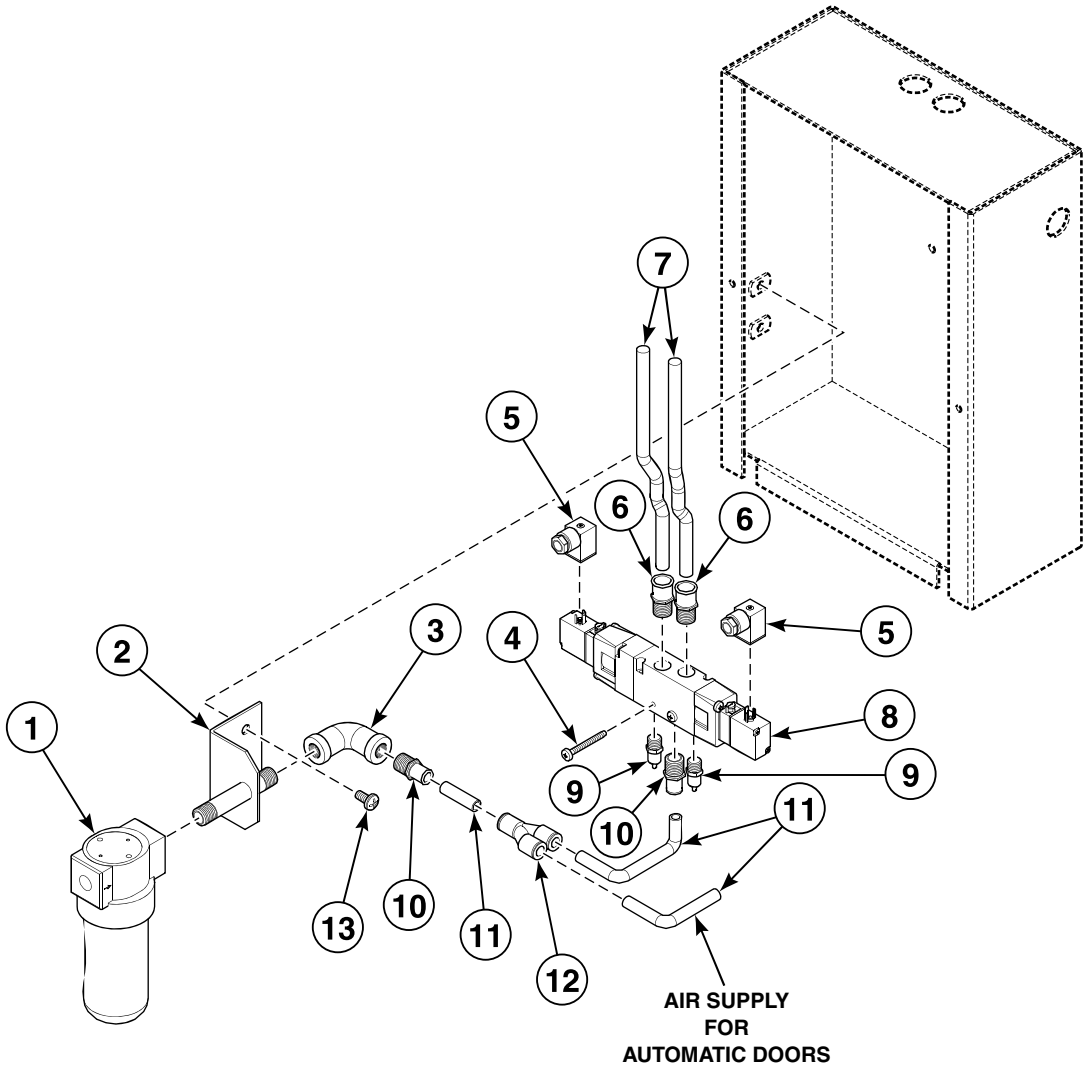

TMB2862P_D1030

© Copyright, Alliance Laundry Systems LLC – DO NOT COPY or TRANSMIT

Pneumatic Box - 1-Way Tilting with Manual and Automatic Doors

REF	PART NO.	DESCRIPTION	COMMENTS
1	PT663	Regulator Filter	
2	N/A	Regulator Bracket	
3	N/A	Elbow	1/4 inch
4	N/A	Screw	1/4-20 x 2 3/4 inch long
5	PR269	Female Electric Plug	
6	PR407	Straight Fitting	3/8 inch x 1/4 inch
7	N/A	Tubing	3/8 inch; Nylon
8	PR910	3-Position Valve	
9	PR541	Flow Control/Filter	
10	PR418	Straight Fitting	1/4 inch x 1/4 inch
11	N/A	Tubing	1/4 inch; Nylon
12	N/A	Y Fitting	1/4 inch; For auto door option
13	SB-00921-0	Screw	1/4-20 x 1/2 inch long; Round head

N/A = Part no longer available

© Copyright, Alliance Laundry Systems LLC – DO NOT COPY or TRANSMIT

Pneumatic Box - 2-Way Tilting with Automatic Doors

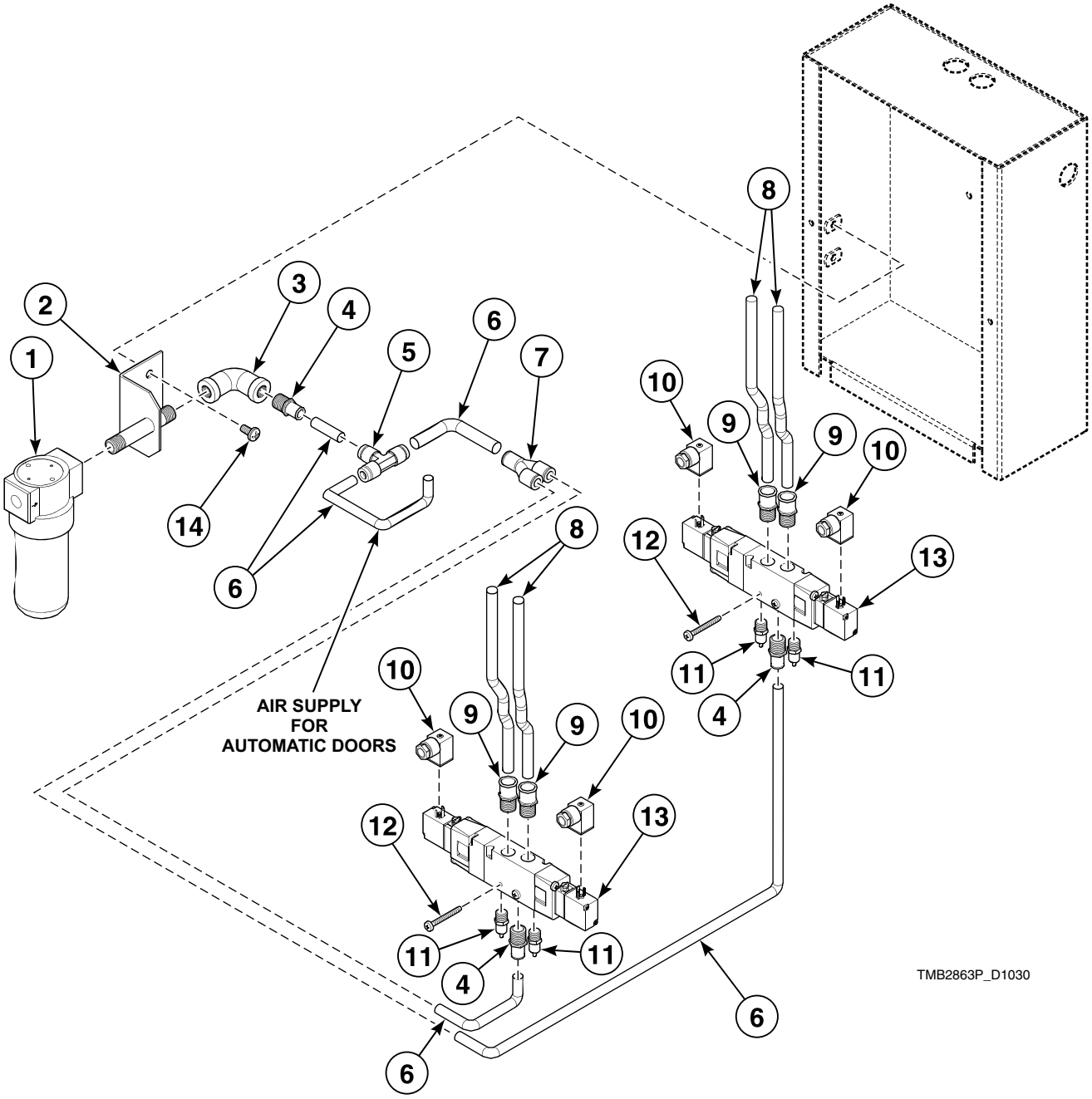

© Copyright, Alliance Laundry Systems LLC – DO NOT COPY or TRANSMIT

Pneumatic Box - 2-Way Tilting with Automatic Doors

REF	PART NO.	DESCRIPTION	COMMENTS
1	PT663	Regulator Filter	
2	N/A	Regulator Bracket	
3	N/A	Elbow	1/4 inch
4	PR418	Straight Fitting	1/4 inch x 1/4 inch
5	N/A	T Fitting	1/4 inch; For auto door option
6	N/A	Tubing	1/4 inch; Nylon
7	N/A	Y Fitting	1/4 inch
8	N/A	Tubing	3/8 inch; Nylon
9	PR407	Straight Fitting	3/8 inch x 1/4 inch
10	PR269	Female Electric Plug	
11	PR541	Flow Control/Filter	
12	N/A	Screw	1/4-20 x 2 3/4 inch long
13	PR910	3-Position Valve	
14	SB-00921-0	Screw	1/4-20 x 1/2 inch long; Round head

N/A = Part no longer available

© Copyright, Alliance Laundry Systems LLC – DO NOT COPY or TRANSMIT

Automatic Door Cylinders/Fittings

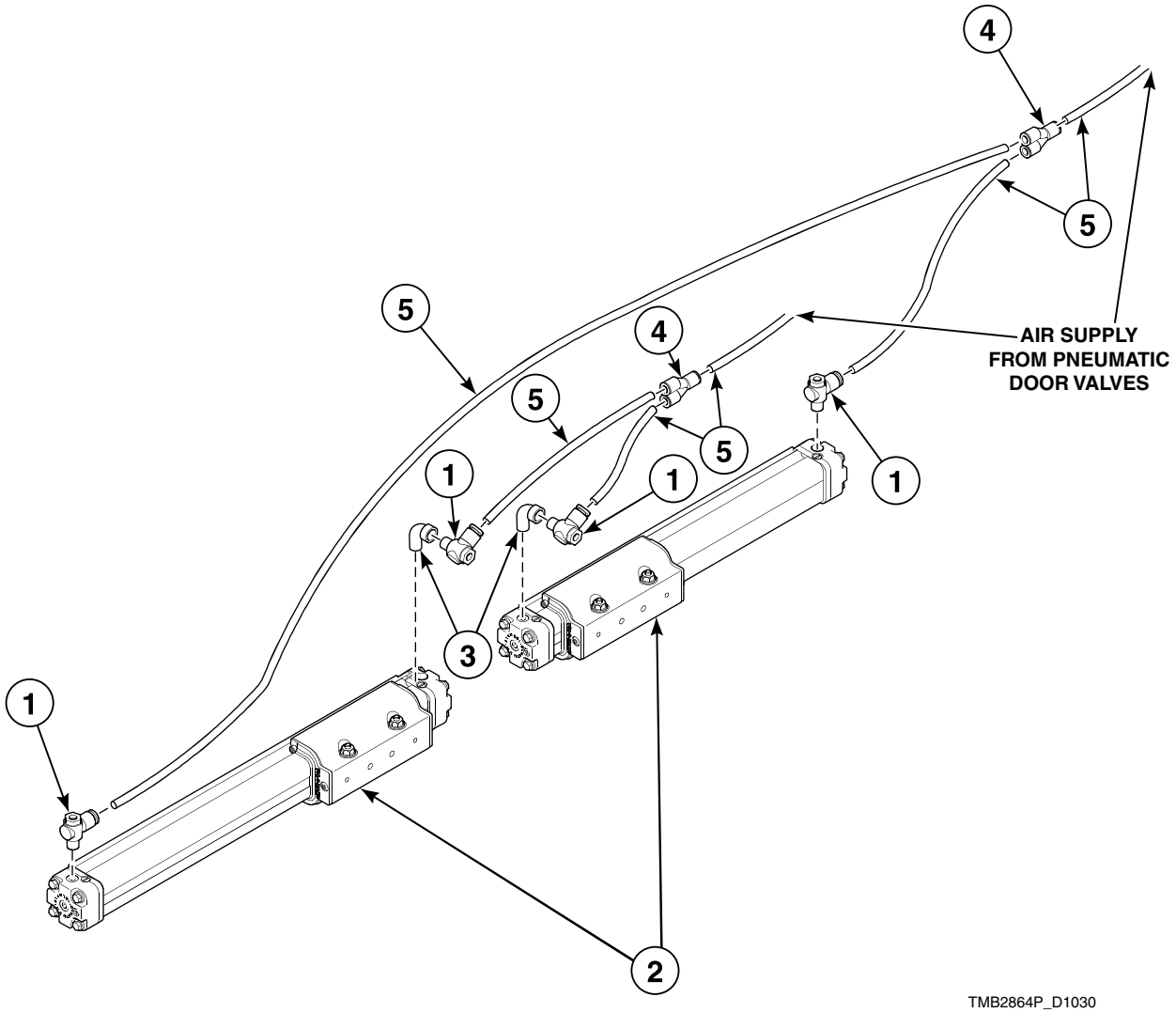

© Copyright, Alliance Laundry Systems LLC – DO NOT COPY or TRANSMIT

Automatic Door Cylinders/Fittings

REF	PART NO.	DESCRIPTION	COMMENTS
1	N/A	Check Valve Fitting	1/8 NPT-1/4 tube
2	N/A	Cable Cylinder	
3	FG142	Street Elbow	1/8 NPT
4	N/A	Y Fitting	1/4 inch tube
5	N/A	Tubing	1/4; Sold per foot

N/A = Part no longer available

© Copyright, Alliance Laundry Systems LLC – DO NOT COPY or TRANSMIT

Automatic Door Pneumatic Valves/Fittings

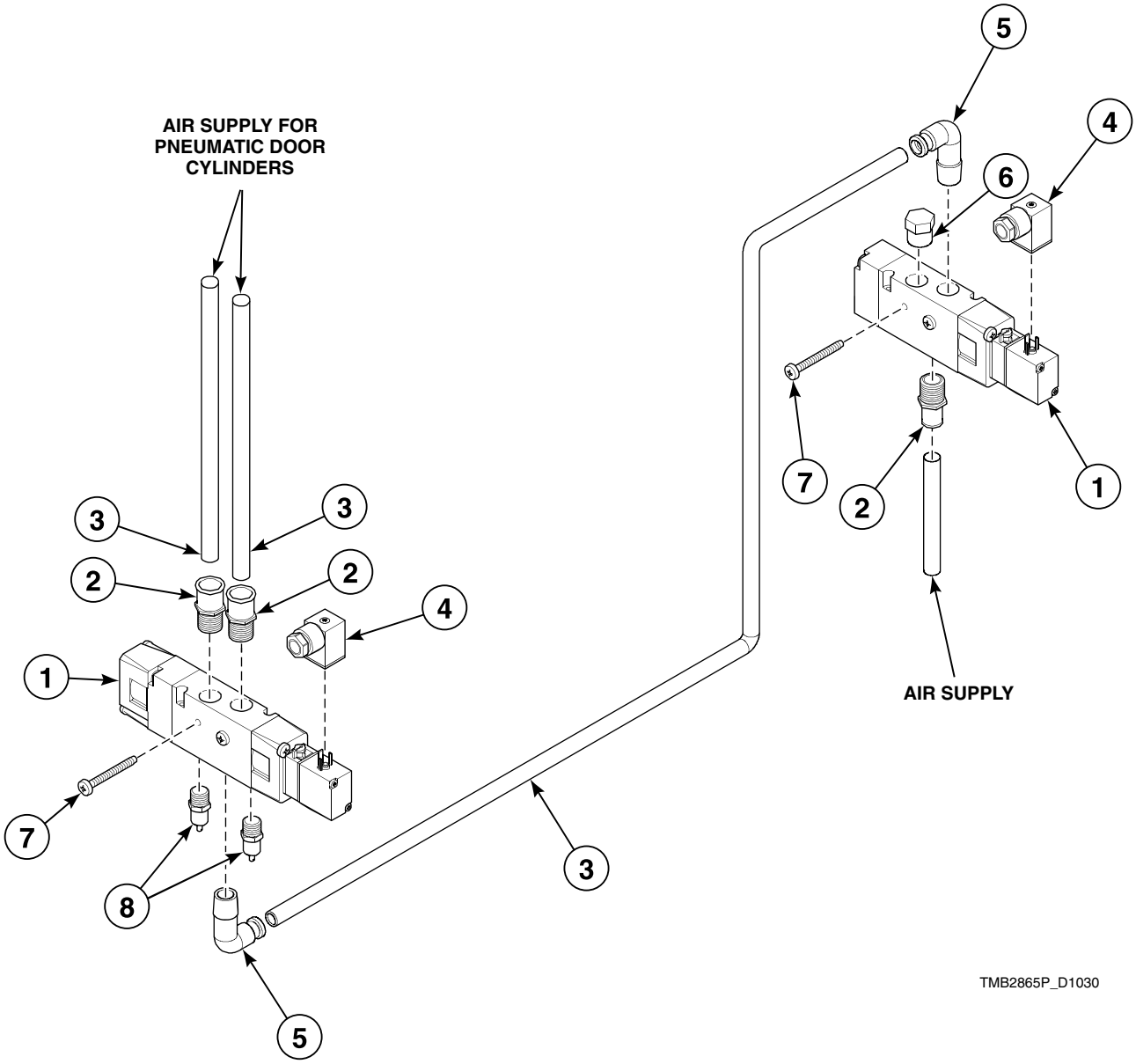

© Copyright, Alliance Laundry Systems LLC – DO NOT COPY or TRANSMIT

Automatic Door Pneumatic Valves/Fittings

REF	PART NO.	DESCRIPTION	COMMENTS
1	PR698	Valve	
2	PR418	Straight Fitting	1/4 NPT x 1/4 tube
3	N/A	Tubing	1/4; Nylon
4	PR269	Female Electric Plug	
5	N/A	Elbow Fitting	1/4 NPT-1/4 tube
6	TU10946	Pipe Plug	1/4 NPT
7	N/A	Screw	1/4-20 x 2 3/4 inch long
8	PR541	Flow Control/Filter	

N/A = Part no longer available

© Copyright, Alliance Laundry Systems LLC – DO NOT COPY or TRANSMIT

Cylinder, Fittings and Hardware

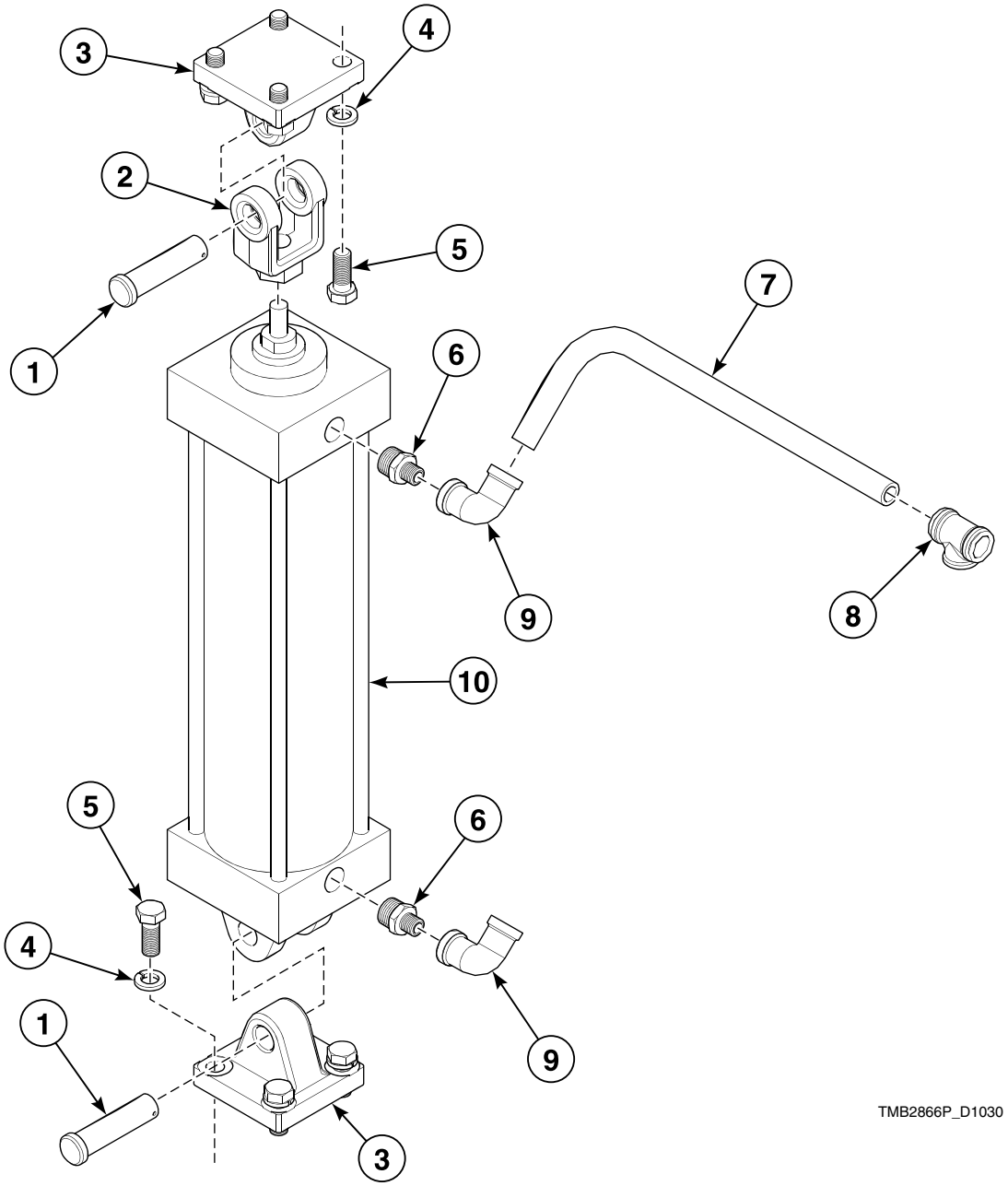

© Copyright, Alliance Laundry Systems LLC – DO NOT COPY or TRANSMIT

Cylinder, Fittings and Hardware

REF	PART NO.	DESCRIPTION	COMMENTS
1	TUL321	Clevis Pin	
2	N/A	Clevis Rod	
3	TUL322	Eye Bracket	
4	TU2831	Washer	1/2 inch
5	H88012034	Screw	1/2-13
6	SF329	Reducing Bushing	1/2 inch to 3/8 inch
7	N/A	Tubing	3/8 inch; Nylon
8	N/A	Tee	3/8 ODT
9	PR406	Elbow Fitting	90 degrees; 3/8 inch x 3/8 inch
10	TUL280	Air Cylinder	4 inch x 13.5 inch stroke

N/A = Part no longer available

© Copyright, Alliance Laundry Systems LLC – DO NOT COPY or TRANSMIT

FDS Sensor Assembly

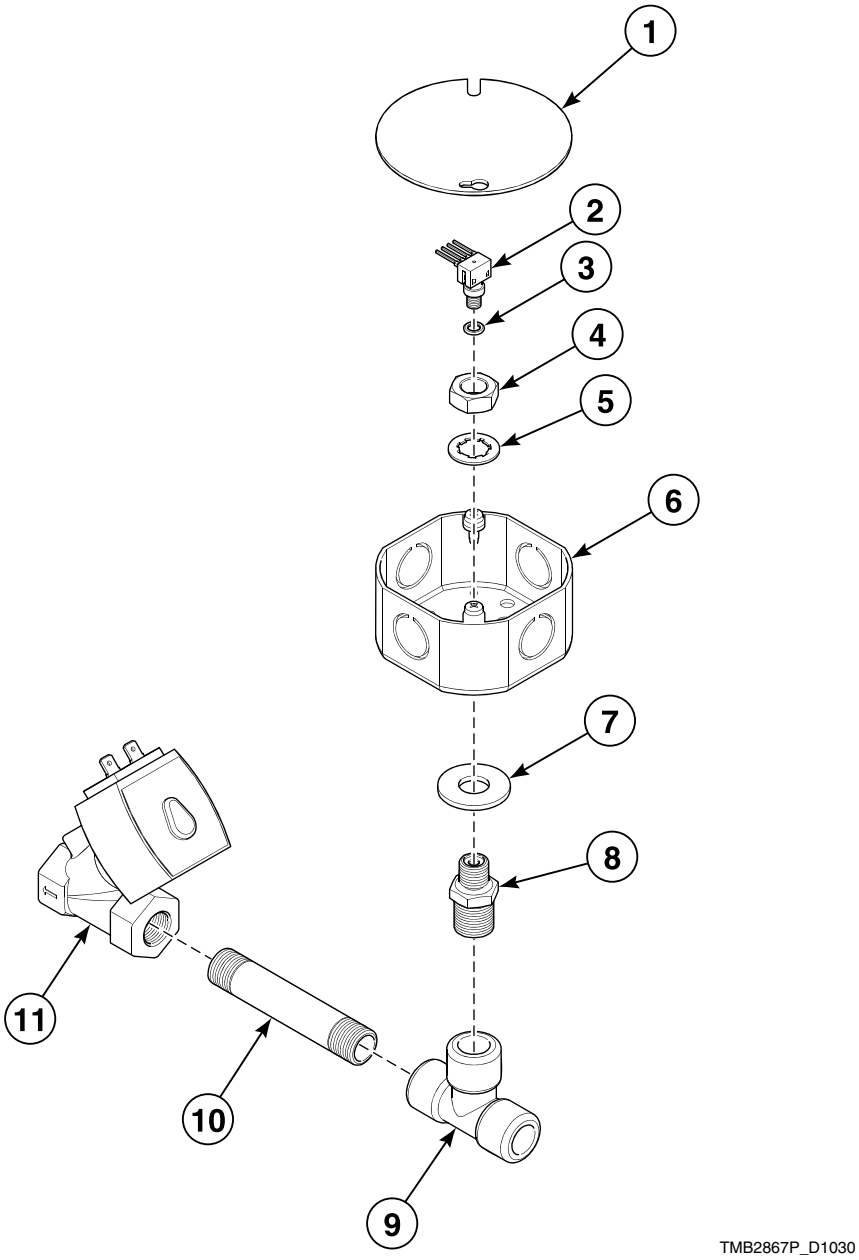

© Copyright, Alliance Laundry Systems LLC – DO NOT COPY or TRANSMIT

FDS Sensor Assembly

REF	PART NO.	DESCRIPTION	COMMENTS
1	TU2335	Junction Box Cover	
2	TU15823P	Pressure Sensor	
3	TU15824	O-Ring Seal	
4	OP235	Nut	1/2 inch; Jam
5	25820	Washer	1/2 inch
6	TUX605	Junction Box	
7	TU2883	Washer	1/2 inch; Zinc; Flat
8	TUX606	Pressure Sensor Fitting	
9	SF247	Tee	3/8 inch
10	390401246	Pipe Nipple	3/8 inch x 3 1/2 inch long
11	F1289P	Solenoid Valve	

© Copyright, Alliance Laundry Systems LLC – DO NOT COPY or TRANSMIT

FDS Water Manifold Assembly

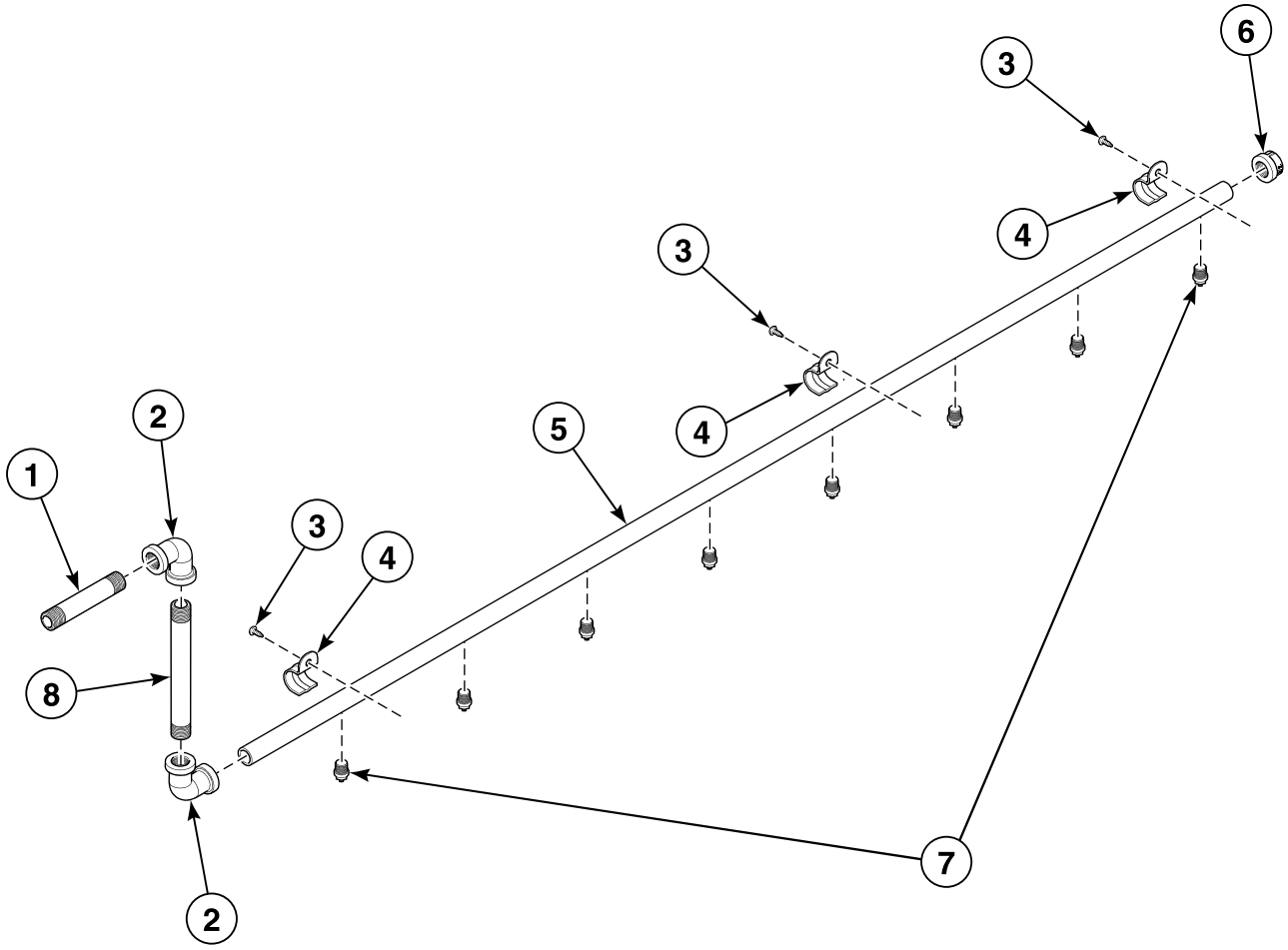

© Copyright, Alliance Laundry Systems LLC – DO NOT COPY or TRANSMIT

FDS Water Manifold Assembly

REF	PART NO.	DESCRIPTION	COMMENTS
1	390401246	Pipe Nipple	3/8 inch x 3 1/2 inch long
2	TU11702	Elbow	3/8 inch
3	TU7733	Screw	No. 8
4	C332	Conduit Strap	
5	N/A	Water Manifold	8 nozzles
6	TUX608	End Cap	3/8 inch
7	TUX609	Water Nozzle	
8	TUL439	Pipe Nipple	3/8 inch x 5 1/2 inch long

N/A = Part no longer available

© Copyright, Alliance Laundry Systems LLC – DO NOT COPY or TRANSMIT

Steam Bonnet

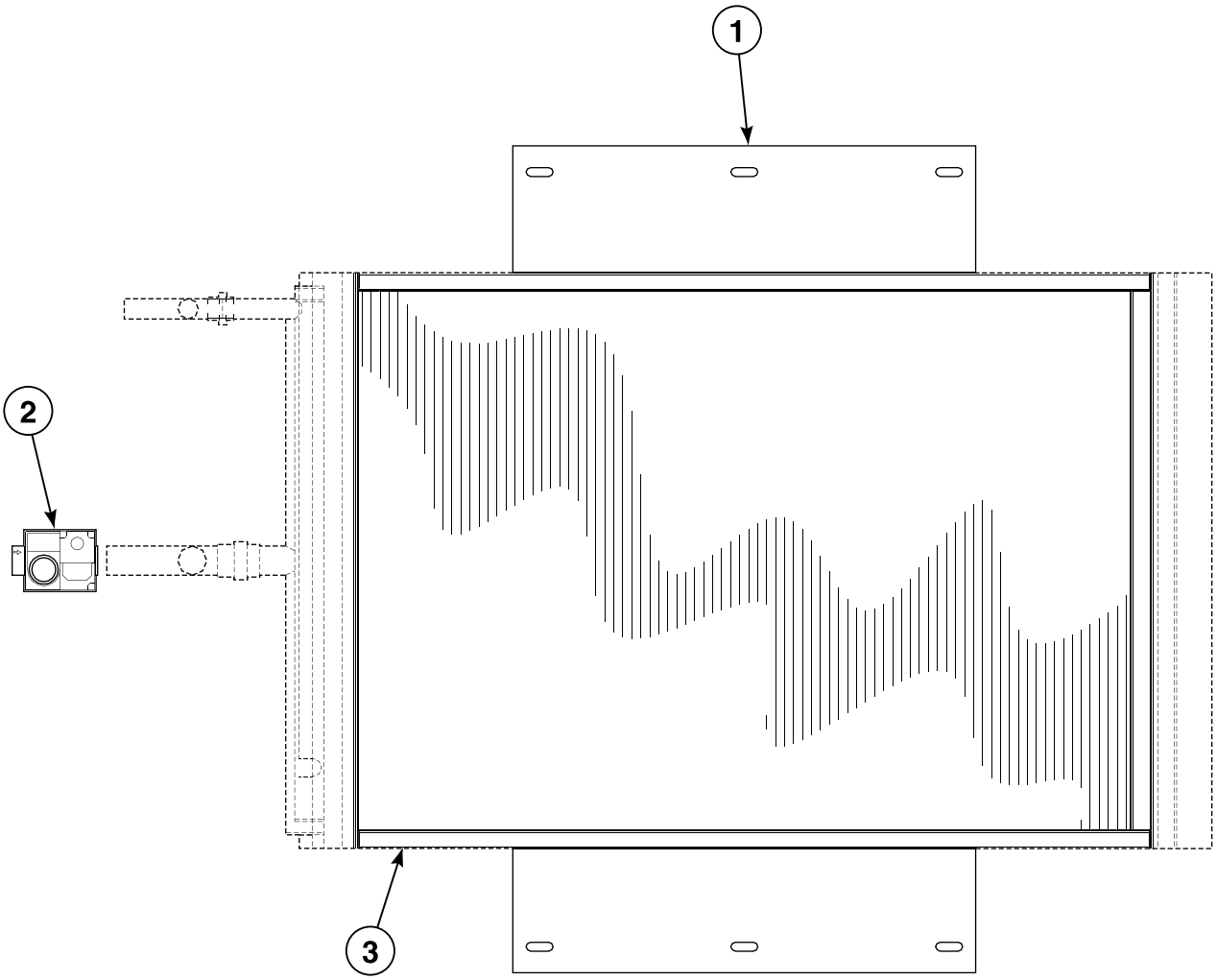

TMB2869P_D1030

© Copyright, Alliance Laundry Systems LLC – DO NOT COPY or TRANSMIT

Steam Bonnet

REF	PART NO.	DESCRIPTION	COMMENTS
	TUL557P	Steam Bonnet Union	Supply and return; Set
1	N/A	Steam Bonnet	
	TUL363	Steam Coil	
2	TUL356	Steam Valve	1 1/2 inch
3	TUL331	Filter	2 required

N/A = Part no longer available

© Copyright, Alliance Laundry Systems LLC – DO NOT COPY or TRANSMIT

Gas Bonnet Assembly

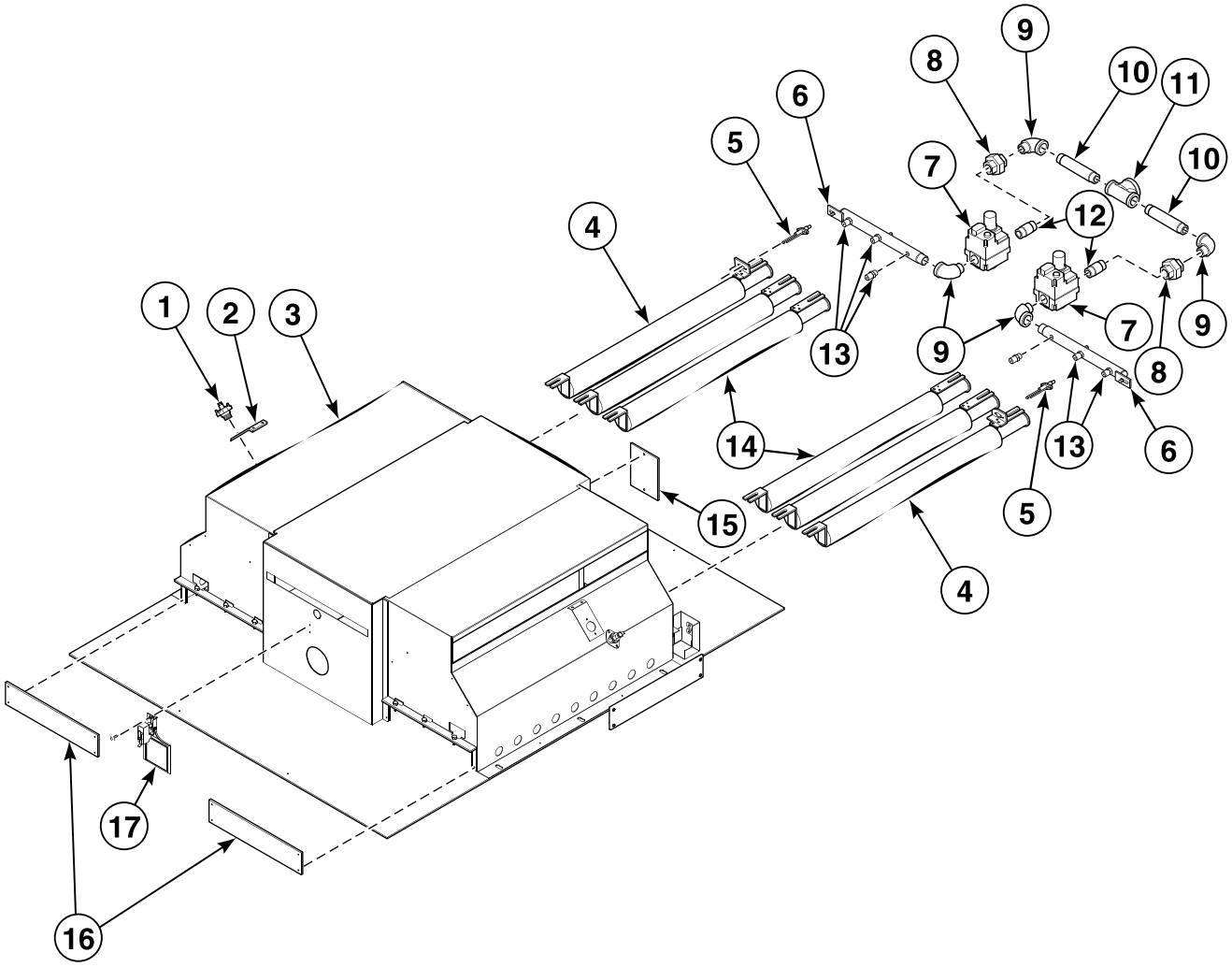

TMB2870P_D1030

© Copyright, Alliance Laundry Systems LLC – DO NOT COPY or TRANSMIT

Gas Bonnet Assembly

REF	PART NO.	DESCRIPTION	COMMENTS
	GA-00803-0	Suppression Lead	
1	TU13678	Thermostat	
2	N/A	Thermostat Bracket	
3	N/A	Bonnet Housing	
4	TU14797	Ignition Burner Assembly	
5	GA-00764-0P	Electrode	
6	TU14463	Gas Manifold	
7	TUX352P	Gas Valve	Natural Gas (N.G.)
	TUX435	Gas Valve	Liquid Petroleum Gas (L.P.)
8	M411419	Pipe Union	
9	TU4602	Street Elbow	
10	H85101673	Pipe Nipple	
11	N/A	Reducing Tee	
12	M411417	Pipe Nipple	
13	TU3539	Burner Orifice	
14	TU14796	Burner Assembly	
15	TU15671	Air Switch Cover Plate	
16	N/A	Bonnet Cover Plate	
17	TU8206	Air Switch Kit	

N/A = Part no longer available

© Copyright, Alliance Laundry Systems LLC – DO NOT COPY or TRANSMIT

Bonnet Support Brackets

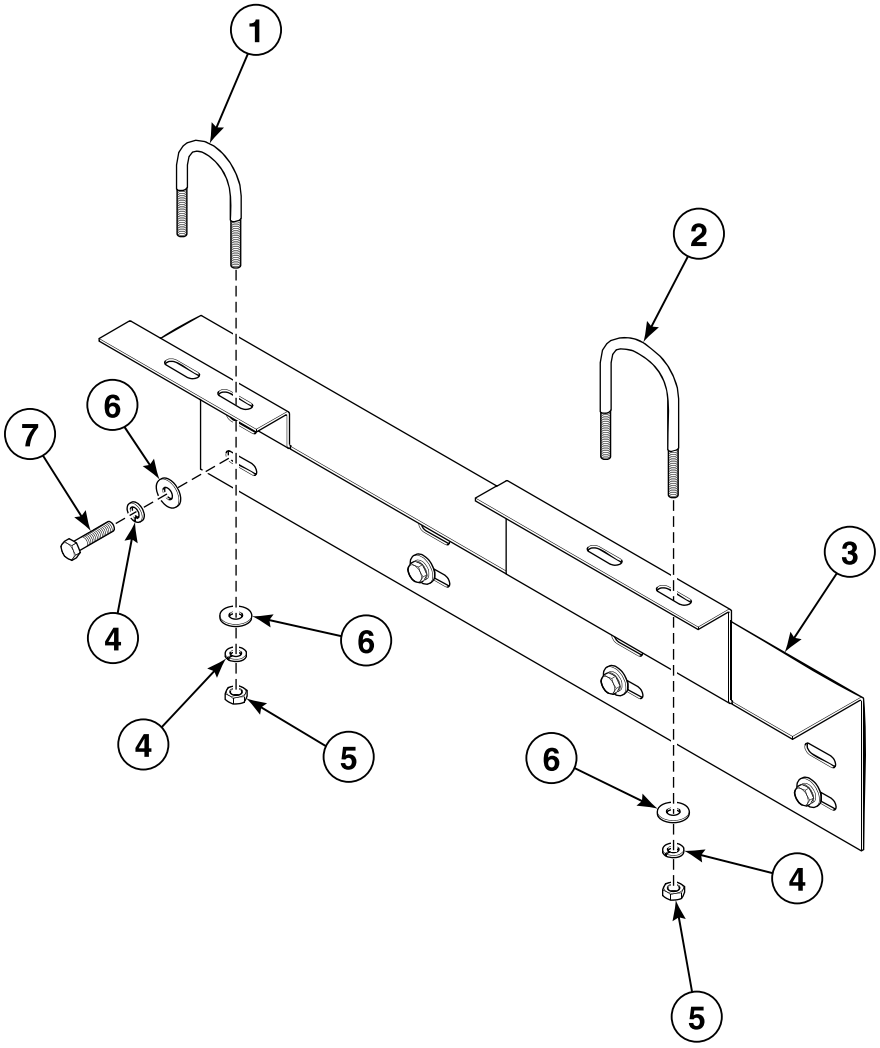

TMB2871P_D1030

© Copyright, Alliance Laundry Systems LLC – DO NOT COPY or TRANSMIT

Bonnet Support Brackets

REF	PART NO.	DESCRIPTION	COMMENTS
1	N/A	U-Bolt	1 inch pipe
2	N/A	U-Bolt	2 inch pipe
3	N/A	Bonnet Support Plate	
4	03189	Washer	1/4 inch
5	20275	Nut	1/4-20
6	TU2847	Washer	1/4 inch
7	N/A	Screw	1/4-20 x 1 inch

N/A = Part no longer available

© Copyright, Alliance Laundry Systems LLC – DO NOT COPY or TRANSMIT

Additional Parts

PART NO.	DESCRIPTION	COMMENTS
TUL526	Contact Block	NC
TUL527	Contact Block	NO
TUL547	Contact Block	
PT633	Right Arm Assembly	

© Copyright, Alliance Laundry Systems LLC – DO NOT COPY or TRANSMIT

Parts Index

A

Actuator Arm
TU2463 51

Adjustment Rod Weldment
TUX575 ..... 55, 57

Air Cylinder
TUL280 83

Air Switch Cover Plate
TU15671 91

Air Switch Insulator
TU1770 51

Air Switch Kit
TU8206 ..... 51, 91

Air Switch Mounting Bracket
TU8171 51

Angle Connector
TU4791 69

B

Basket Assembly
TUL120 17

Basket Guide Wheel
TUL156 47

Basket Guide Wheel Assembly
TUL312 ..... 43, 45, 47
TUL317 ..... 17, 45

Basket Wheel
TUL109 55

Bearing
TUL314 47

Belt
TUL353 55
TUL528 57

Board
TU15814A 13

Bolt
TUL158 ..... 43, 45
TUL458 ..... 21, 25
TUL459 ..... 21, 25

Bottom Cover Plate
TUL214 15

Box
TUL373 13

Box Cover
TUL222 ..... 13, 23

Burner Assembly
TU14796 91

Burner Orifice
TU3539 91

Bushing
TU10193 69
TU15155 57
TU15506 57

C

Cable
CFB7200 69

Clevis Pin
TUL321 83

Conduit Strap
C332 87

Connector
TU4790 69

Contact Block
TUL526 94
TUL527 94
TUL547 94

Contact Switch
TUL272 ..... 7, 9, 11

Contactor
TUL276P 53
TU14684 17

Control Board
254/00070/00P 11

Control Box Lid
TUL238 15

Control Label
254/00018/00 11

Controller
TU14404P 7, 9

Cylinder Mounting Bracket
TUL396 ..... 35, 37

D

Din Rail
TUL289 53
TU14986 53

Door Bracket
TUL184 ..... 31, 33, 35, 37
TUL195 ..... 31, 33

Door Holder
TU15744H 19, 21

Door Roller Assembly
TUL345 ..... 31, 33, 35, 37

E

Elbow
TU11702 87

Elbow Fitting
PR406 83

Electrode
GA-00764-0P 91

Emergency Stop Button Kit
TU14435 ..... 7, 9, 11

End Cap
TUX608 87

E-Ring
F888 51

N/A items do not appear in index.

© Copyright, Alliance Laundry Systems LLC – DO NOT COPY or TRANSMIT

Eye Bracket
TUL322 83

F

Female Electric Plug
PR269 ..... 75, 77, 81
Filter
TUL331 89
Flat Washer
TU4820 29
Flow Control/Filter
PR541 ..... 75, 77, 81

G

Gas Manifold
TU14463 91
Gas Valve
TUX352P 91
TUX435 91
Gear Box Assembly
TUL182 55
Ground/End Terminal Block
TU15007 ..... 53, 71

H

Hinge Assembly
TUL454 ..... 21, 25

I

Idler Bushing
TUX461 55
Igniter
GA-00765-0P 69
Igniter Module
GA-11007-0P 69
Ignition Burner Assembly
TU14797 91
Induction Fan
TUX220 57
Inverter
TUL536 49
TUL537 49

J

Junction Box
TUX605 85
Junction Box Cover
TU2335 85

K

Kickplate Fastener
SB-00949-0 29

L

Label
TU3476 51
LED Light Assembly
TUT316 ..... 9, 11
Lever Switch
TUL279 39
Lever Switch, 3-Position
TUL273 ..... 9, 11
Lint Door Switch
EA-11621-0 ..... 19, 21
Loading Door Assembly
TUL176 ..... 15, 31
TUL177 ..... 15, 33
TUL449 ..... 15, 37
Loading Door Glass
TUL335 ..... 31, 33, 35, 37
Lock Bushing
TU6723 ..... 55, 57

M

Magnet
TU15536 29
Magnetic Tape
TUL336 ..... 31, 33
Main Bearing
SFD119 ..... 19, 21
Membrane Switch
44037901P 9
Microswitch
TU14482 ..... 39, 41, 51
Motor
MTR318 55
MTR319 57
Motor Bushing
F280214 57
Motor Pulley
C000472 57

N

Nut
FG344 ..... 31, 33, 35, 37
OP235 85
TU1771 51
TU2881 ..... 55, 57
TU3266 ..... 59, 61, 63, 67
TU3400 ..... 7, 9, 11, 59, 63, 65, 67
TU4787 57
03673 ..... 19, 21
20275 ..... 17, 93

N/A items do not appear in index.

© Copyright, Alliance Laundry Systems LLC – DO NOT COPY or TRANSMIT

O

Operating Touchpad
254/00039/00 11

O-Ring Seal
TU15824 85

Overload
TU14707 53
TU15593 53

P

Pillow Block
TUX429 57

Pillow Block Bearing
TU13334 55

Pipe Nipple
H85101673 91
M411417 91
TUL439 87
390401246 ..... 85, 87

Pipe Plug
TU10946 81

Pipe Union
M411419 91

Pneumatic Box Cover Plate
TUL228 23

Pneumatic Door Bolt Cover Plate
TUL402 ..... 31, 33, 35, 37

Pneumatic Door Cover Plate
TUL401 ..... 31, 35

Pressure Sensor
TU15823P 85

Pressure Sensor Fitting
TUX606 85

Probe Cover Plate
TU14694 ..... 65, 67

ProHC Upper Sensor Assembly
TU14724 65

Pushbutton Switch
TUL274P 9, 11

R

Reducing Bushing
SF329 83

Regulator Filter
PT663 ..... 73, 75, 77

Relay
F1300 11
F1300P 9, 11, 53

Retaining Tube
TUL136 43
TUL313 45

Right Arm Assembly
PT633 94

Roller
C5531 15

S

Screw
AT383 ..... 29, 49
C1723 ..... 31, 33, 35, 37
FB189 17
F430923 ..... 31, 33, 35, 37
F540 13
F725 ..... 19, 21
H88012034 ..... 55, 83
LB55 ..... 31, 33, 35, 37
M262 ..... 59, 61
M400072 59
OP380 57
SB-00828-0 ..... 63, 67
SB-00921-0 ..... 73, 75, 77
SB-00952-0 ..... 63, 65, 67
TUX503 19
TU2793 69
TU3219 51
TU7733 ..... 9, 11, 13, 45, 51, 53, 65, 67, 71, 87
02422 ..... 17, 49

Sensor Assembly
TU15464 63

Sensor Bracket
CA-13067-0 67

Sheave
TUX595 57
TU8445 55

Sheave Bushing
TU3807 55

S-Hook
J17 29

Sleeve Bushing
TU5431 69

Snap Bushing
TU2372 69

Solenoid Valve
F1289P 85

Spring
TUL159 ..... 43, 45

Steam Bonnet Union
TUL557P 89

Steam Coil
TUL363 89

Steam Valve
TUL356 89

Straight Fitting
PR407 ..... 75, 77
PR418 ..... 73, 75, 77, 81

Street Elbow
FG142 79
TU4602 91

Stud
TU12253 9

Suppression Lead
GA-00803-0 91

T

Tee
SF247 85

N/A items do not appear in index.

© Copyright, Alliance Laundry Systems LLC – DO NOT COPY or TRANSMIT

Temperature and Humidity Sensor
254/00071/10 ..... 65, 67
Temperature Sensor
254/00072/10 63
Temperature Switch
EA-00411-0 ..... 59, 63, 67
Terminal Block
TU14958 ..... 53, 71
Terminal Block End Retainer
TU14959 ..... 53, 71
Thermistor Kit
TU11991K 59
Thermostat
TUX613 61
TU13678 91
Thermostat and Bracket Assembly
TU15538 59
Thermostat Assembly
TU15855 61
Thermostat Bracket
TU15537 ..... 59, 61
Transformer
TU13802P 53

U

Upper Probe Mounting Plate
TU14693 65

V

Valve
PR698 81
Valve, 3-Position
PR910 ..... 75, 77

W

Washer
M270 ..... 7, 9, 11
M400080 ..... 31, 33, 35, 37
TU2831 ..... 55, 83
TU2847 ..... 17, 93
TU2883 ..... 15, 17, 21, 85
TU4820 ..... 19, 21
VSB134 57
03189 ..... 17, 31, 33, 35, 37, 93
21734 29
25820 85
Water Nozzle
TUX609 87

N/A items do not appear in index.

© Copyright, Alliance Laundry Systems LLC – DO NOT COPY or TRANSMIT